ADDENDUM NO. 1
TO
PROCUREMENT AND CONTRACTING REQUIREMENTS
FOR
Sweetser Wastewater Improvements
FOR
Town of Sweetser
Issue Date: September 15th, 2026

BIDS ARE DUE BY

Thursday September 24th, 2026
07:00 PM (Local Time)
113 N Main Street, Sweetser, IN 46987

This addendum consists of nine (9) pages and the following attachments:

Attachment No. 1:	**Pre-Bid Conference Meeting Minutes and Sign-In Sheet**
Attachment No. 2:	**IDEM Construction Permit**
Attachment No. 3-7:	**Revised Specifications**
Attachment No. 8-10:	**Revised Drawings**
Attachment No. 11:	**Previous PER**
Attachment No. 12:	**2013 Bid Set Plans**
Attachment No. 13:	**Roof Report from CE Solutions**
Attachment No. 14:	**Revised Instructions to Bidders (00 21 13)**
Attachment No. 15:	**Revised Ductile Iron Pipe and Fittings (40 05 16)**

The following, as additions to and modifications in the Bidding Requirements and Contract Documents, will be included in, and become a part of the **Sweetser Wastewater Improvements Project**. This Addendum forms a part of the Contract Documents. Bidders are, therefore, instructed to take the following into account in rendering any Bid for this work. Acknowledge receipt of this Addendum in the space provided on the Bid Form.

CHANGES TO PRIOR ADDENDA: (N/A)

CHANGES TO PROCUREMENT REQUIREMENTS: (N/A)

CHANGES TO CONTRACTING REQUIREMENTS: (N/A)

CHANGES TO SPECIFICATIONS:

1. Updated 00 41 13, Bid Form **(Attachment No. 3)**.
2. Updated 01 20 00, Contract Items, to update various bid items **(Attachment No. 4)**.
3. Updated 40 05 20, Valves, to update section 2.14 and delete the original 2.15 **(Attachment No. 5)**.

4. Updated 40 05 57 to update sections for modulating and nonnodulating actuators **Attachment No. 6)**.
5. Updated 46 41 46, Thickening Screw Press, to update the drum inner diameter from 0.8m to 0.4m **(Attachment No.7)**.
6. Updated 00 21 13, Instructions to Bidders, to update what will be used to determine the lowest, responsive, responsible bidder (**Attachment No.14**).
7. Updated 40 05 16, Ductile Iron Pipe and Fittings, to modify pipe coatings (**Attachment No.15**).

CHANGES TO DRAWINGS:

1. Updated T100 sheet index **(Attachment No.8)**.
    a. Adding the following sheets that were missing to the index: S303, E107B, E110, E112, E113, I106B, I109B.
    b. Updated S401 to be named "Truss Reinforcement".
2. Updated C104A **(Attachment No. 9)**.
    a. Updated this sheet to include a floor drain and drain line underneath the eyewash station.
3. Updated Sheets S101 and S401 **(Attachment No. 10)**
    a. S101 was updated to use assumed soil bearing values rather than refer to a geotechnical engineer.
    b. Updated the name of this sheet to be "Truss Reinforcement" and removing the previously stated "Truss Reinforcement for Solar Improvements".

CHANGES TO MISCELLANEOUS DOCUMENTS:

1. Included as an attachment to this addendum (**Attachment No. 1**) is the Pre-Bid Conference Meeting Minutes and Sign-In Sheet.
2. Included as an attachment to this addendum **(Attachment No. 2)** is the IDEM Construction Permit.
3. Included as an attachment to this addendum **(Attachment No. 11)** is the previous PER developed.
4. Included as an attachment to this addendum **(Attachment No. 12)** is the original bid set from 2013. Note: these are not as-builts.
5. Included as an attachment to this addendum **(Attachment No. 13)** is the report from CE Solutions regarding the roof.

SUBMITTED QUESTIONS/REQUESTS & RESPONSES:

I. <u>Pre-Bid Meeting Questions</u>

a. Q: How will the lowest bidder be determined?
    *i. A: Proposed increase or decrease in price for the Bid Alternates will be considered in determination of the lowest responsive and responsible bidder (**Attachments 3 and 14**).*

II. <u>Emailed Questions</u>

1. Q: (Vendor Question) For the screw press, the inner diameter for the drum should be 0.4 meter?
    A. Yes, this is correct. Please see the updated specification with the change highlighted.

2. Q: (Vendor Question) Does the skid need to be constructed of stainless-steel or is hot dipped galvanized acceptable for the screw press?
    A. *The project must be BABAA compliant and it would be the responsibility of the general contractor that they maintain BABAA compliance, and if any De Minimis Cost waivers are to take place. Specification 46 71 46 currently notes an aluminum skid for the screw press and stainless steel will be added as an acceptable material for the skid. Hot dip galvanized is not an acceptable material for the skid. Please see updated 46 41 46 specification* ***(Attachment No.7****).*
3. Q: (Vendor Question) Can a sludge sample from the facility be collected?
    A. *Yes, that is not an issue. Please coordinate with the operator, Patrick Kendall, at 765-667-6136 or patrickkendal@sweetser.in for a date and time.*
4. Q: (Contractor Question) Section 33 05 50 Para. 3.6 'SCHEDULE' defines material, joint and coating abbreviations (Al, DI, PVC … F, MJ, PO … CL, E, P …) but no schedule table follows, and Section 40 05 18 refers to 'the piping schedules' for coatings, joints and test pressures. No pipe schedule or line-designation table appears in the Project Manual or on any drawing sheet; materials appear only as individual callouts (e.g. 'SDR 26 PVC' on C104A, 'SDR 21 PVC' on C200). Please issue the pipe schedule the specifications reference, or confirm that the drawing callouts are the sole definition of pipe material, class, joint type and coating for every line, and identify the governing material for any line on the plans that carries no callout.
    A. *The drawing callouts confirm overall pipe information. Ductile Iron Pipe shall follow 40 05 16 Section 2.2.J. Below grade pipe shall have cement-lined interior, exterior primer and exterior asphaltic coating. Pipe above grade shall have cement-lined interior, exterior primer, exterior asphaltic coating, and a compatible 2 mil thickness finish coat that is to be field applied.*
5. Q: (Contractor question) Sections 40 05 16 Para. 3.2.C and 33 05 50 Para. 3.3.A direct that pipelines be tested 'in accordance with Section 01 45 50.' Section 01 45 50 is not in the Project Manual. Section 40 05 18 Para. 3.2.B refers to test pressures in Sections 33 01 30.13, 33 05 52, 33 14 13 and 33 31 13; 33 05 52 and 33 14 13 are not in the Project Manual and 33 31 13 states no test pressure. Please provide the field pressure test requirements (test pressure, duration, allowable leakage, test medium) for exposed and in-structure ductile iron and miscellaneous process piping at the WWTP and lift stations. Note that 40 05 20 Para. 2.2.B.5 (valve flange rating) and Para. 2.17.B (plug valve shop hydrostatic test) are both defined relative to 'the test pressure specified for the pipeline,' which is currently undefined.
    A. *Reference 33 01 30.13 for gravity sewer testing requirements and 33 05 05.31 for pressurized sewer testing requirements.*
6. Q: (Contractor Question) Section 40 05 18 includes 'plastic' pipe in its scope, lists PVC/CPVC manufacturers (Para. 2.1.A.1.e) and references ASTM D1784, D1785, D2464, D2564 and D2855, but Part 2.2 Materials contains paragraphs only for aluminum, brass, cast-iron soil, copper and lined steel — there is no PVC or CPVC material paragraph. Please specify for all exposed/in-plant PVC and CPVC piping (polymer, chemical, drain and utility lines at the screw press and elsewhere): pipe schedule (40 or 80), joint type (solvent weld / threaded / flanged), pressure rating, and fitting standard.
    A. *The drawing callouts will provide overall pipe information. Please see answer to question #4 as well.*
7. Q: (Contractor Question) Electric valve actuators are specified twice with different requirements: Section 40 05 20 Para. 2.14–2.15 (E-I-M / Limitorque / Rotork, 120 V 1-ph, hardwired controls) and Section 40 05 57 (AUMA or approved equal, 120 V 1-ph, Ethernet/IP gateway, Bluetooth, IP68 submersible, 5-year warranty). Section 40 05 20 also retains unfilled

template text: Para. 2.14.D 'fully open the valve … in ___ seconds and fully close it in ___ seconds'; Para. 2.14.E '(indoor) (outdoor)'; Para. 2.14.Q '(bimetallic automatic reset type) (manual reset type)'; Para. 2.15.B 'fail (open) (closed) (in last position)'. Please confirm which section governs electric actuators, provide the required stroke times and fail positions, and identify the 'valve list' referenced in 40 05 57 Para. 2.2.A.4 (none is included in the documents).

A. *40 05 57 will govern the electric actuators. 40 05 20 has been revised to reference to Section 40 05 57. See the table below for the valve list. For clarification, all existing and proposed equipment within the enclosed area for the post-aeration, blowers, and UV system will be considered a non-classified area per NFPA 820.* ***(Attachments No. 5 & 6)***

TAG	*LOCATION*	*VALVE/ACTUATOR DESCRIPTION*	*SIZE*	*NOTES*
BV1001	*POST AERATION TANK*	*POST AERATION AIR FLOW PIPE FROM BLOWERS*	*4”*	*MODULATING - ACTUATOR ONLY*
GV2001	*RAS/WAS WET WELL*	*RAS/WAS FROM CLARIFIER #1 TELESCOPING VALVE*	*6"*	*MODULATING - ACTUATOR ONLY*
GV2002	*RAS/WAS WET WELL*	*RAS/WAS FROM CLARIFIER #2 TELESCOPING VALVE*	*6"*	*MODULATING - ACTUATOR ONLY*
BV1002	*BLOWERS*	*BLOWER MAIN HEADER TO DIGESTER TANKS ISOLATION VALVE*	*6"*	*NON-MODULATING - ACTUATOR ONLY*
BV1003	*BLOWERS*	*BLOWER MAIN HEADER TO AERATION TANKS ISOLATION VALVE*	*6"*	*NON-MODULATING - ACTUATOR ONLY*
BV1004	*AERATION TANK #1*	*AERATION TANK AIR CONTROL VALVE FROM BLOWERS*	*4"*	*MODULATING - ACTUATOR AND VALVE*
BV1005	*AERATION TANK #2*	*AERATION TANK AIR CONTROL VALVE FROM BLOWERS*	*4"*	*MODULATING - ACTUATOR AND VALVE*
BV1006	*DIGESTER TANK #1*	*DIGESTER TANK AIR CONTROL VALVE FROM BLOWERS*	*4"*	*MODULATING - ACTUATOR AND VALVE*

BV1007	*DIGESTER TANK #2*	*DIGESTER TANK AIR CONTROL VALVE FROM BLOWERS*	*4"*	*MODULATING - ACTUATOR AND VALVE*
PV2007	*DIGESTER TANK #1*	*WAS FEED LINE TO TANK #1 CONTROL PLUG VALVE*	*4"*	*NON-MODULATING - ACTUATOR ONLY*
PV2008	*DIGESTER TANK #2*	*WAS FEED LINE TO TANK #2 CONTROL PLUG VALVE*	*4"*	*NON-MODULATING - ACTUATOR ONLY*
PV2009	*FLOW SPLITTER BOX*	*RAS LINE TO AERATION TANKS MAIN SHUTOFF PLUG VALVE*	*4"*	*NON-MODULATING - ACTUATOR ONLY*
PV2010	*FLOW SPLITTER BOX*	*WAS LINE TO DIGESTER TANKS MAIN SHUTOFF PLUG VALVE*	*4"*	*NON-MODULATING - ACTUATOR ONLY*

8. Q: (Contractor Question) ITB 4.02.A.1.a and SC-5.03.C both state that reports of subsurface conditions are 'NOT APPLICABLE.' Sheet S101 nevertheless lists 'Allowable net bearing pressure: 3,000 psf (assumed)' and 'Spread footings 2,500 psf (assumed),' requires foundation soils to be inspected by 'a qualified Geotechnical Engineer,' and refers to 'the geotechnical engineering report.' Please confirm (a) whether a geotechnical report exists for this site and, if so, issue it by addendum; (b) if none exists, whether the Contractor is to retain the Geotechnical Engineer referenced on S101 and whether unsuitable-soil remediation below the assumed bearing values (S101 Note 3.A/B) will be handled by change order; and (c) whether any groundwater information is available for the grinder pits, Kelly Lift Station meter vault, and lift station excavations (Bid Item 6 dewatering).
    A. *No geotechnical report exists and no groundwater information is available at this time. Verbiage was removed from S101 for a geotechnical engineer. The assumed bearing values can be used (**Attachment No. 10**).*
9. Q: (Contractor Question) Exhibit J contains only the Heavy and Highway wage determination (IN20260006) and SC-18.09 directs bidders to 'Grant County – Heavy or Highway.' The Work includes a new post-frame screw press building (Alternate #2, Section 13 34 20, Divisions 06/08/09), an electrical room building envelope (Bid Item 7), and roof/ceiling work (Alternate #3, Allowance #1). Please confirm that the Heavy and Highway determination applies to all work including the building construction, or issue the applicable Building wage determination by addendum. Also note that pages 256–302 of the PDF Project Manual have a corrupt text layer (text search returns unreadable characters); please post a searchable copy of Exhibit J.
    A. *Heavy and Highway Determination will be used since the building is a small percentage of the overall construction. A searchable version is not available to download. Please refer to the current wage determination in the project manual.*

10. Q: (Contractor Question) The Bid Form states that 'proposed increase or decrease in price for the Bid Alternates listed above will not be considered in determination of the lowest responsive and responsible bid,' while ITB 18.03.B states the Owner will announce a 'Base Bid plus alternates' budget and determine the Successful Bidder on the base bid plus alternates in the priority listed. Please confirm the basis on which the low bidder will be determined (Base Bid only, or Base Bid plus some/all Mandatory Alternates), and whether the Owner intends to award all nine Mandatory Alternates.
    A. *The proposed increase or decrease in price for the Bid Alternates will be considered in determination of the lowest responsive and responsible bidder (**Attachments 3 and 14**).*
11. Q: (Contractor Question) The Advertisement states 'The last day for questions is September 15th, 2026' and that a final addendum will be issued no later than September 17th. ITB 7.01 states only that questions received less than seven days before bid opening (i.e., after September 17) may not be answered. Please confirm the last date on which questions will be accepted and answered by addendum.
    A. *The last day for questions will be September 15th, 2026 and the final addendum will be issued on September 17th, 2026.*
12. Q: (Contractor Question) Bid Item 2 (Maintenance of Traffic) is described as the work 'necessary to install the water main to the lines and slopes shown on the Drawings.' Bid Item 3 includes an 'INDOT Settlement Monitoring Plan for work done in INDOT Right of Way.' Bid Item 7 includes 'waterline relocation.' Please (a) correct or confirm the Item 2 description; (b) identify whether any Work occurs within INDOT right-of-way and, if so, which sheets; and (c) identify the sheet(s), size, length and material of the waterline relocation under Item 7 and the governing installation, testing and disinfection sections (Section 33 13 00, referenced by 40 05 06, 40 05 18 and 33 05 50 for disinfection, is not in the Project Manual).
    A. *Bid Item 2 - This should state, "sanitary lines" instead of "water main". Bid Item 3 - No work occurs within INDOT Right-of-Way, and an INDOT Settlement Monitoring plan is not needed. Bid Item 7 - Relocation of the existing waterline and extents is shown on the plans. This is non-potable water. This is not a water main so there are no testing requirements. The waterline is ¾" but has 2" drops. Please see the attached revised 01 20 00 specification (**Attachment No. 4**).*
13. Q: (Contractor Question) Base Bid Item 7 includes 'electrical room – delegated design in the building, but building envelope includes foundations, slab, walls, trusses, and roof' and 'fire rated wall additions and fire rated ceiling additions (including roof structural improvements).' Alternate #2 includes the screw press building envelope 'including … connections to the existing WWTP building,' ventilation, HVAC, lighting and doors. Alternate #3 covers ceiling and roof structural improvements 'excluding the fire rated ceilings and walls.' Alternate #1 (screw press equipment) also includes mobilization, MOT, construction engineering, E&S, restoration and bypass. Please provide a scope matrix assigning each drawing sheet/area to a bid item, and confirm: (a) which building elements are in Item 7 if Alternate #2 is not awarded; (b) whether the mobilization/MOT/E&S/restoration/bypass costs inside Alternates #1–#9 are in addition to Base Items 1–6 or duplicate them; and (c) which sheets define the 'fire rated' walls and ceilings in Item 7.
    A. *There are no items in Alt #2 that are tied to base bid #7. The mobilization/MOT/E&S/Restoration/Bypass in the alternates would be in addition to the Base Bid Items 1-6. Sheets A100-A301 provide information on the fire rated walls. The only locations that need fire rated walls for Item 7 are between the electrical room and the main plant, between the plant and the garage, and around the UV and Blowers. See revised contract items (**Attachment No. 4**).*

14. Q: (Contractor Question) The T001 Sheet List Table lists 82 sheets. The issued plan set contains 89 sheets; the following seven are in the set but not on the index: S303 (Walkway Sections and Details), E107B (Conduit-Cable Schedule), E110 (Kelly Drive LS Electrical Details), E112 (Bank LS Electrical Details), E113 (Eagle Drive LS Electrical Details), I106B (Bank LS VFD Control Panel), I109B (Eagle Drive LS Control Panel Wiring). Please confirm these seven sheets are Contract Drawings and reissue the T001 index by addendum.
    A. *The index has been updated to include these sheets. Please see* ***Attachment No. 8****.*
15. Q: (Contractor Question) Section 01 20 00 Para. 1.13 titles Mandatory Alternate #5 'Case Lift Station Decommissioning' (cap incoming piping, fill wet well, valve vault and structure) and the Advertisement describes 'the decommissioning of one lift station.' The Bid Form lists Alternate 5 as 'Case Lift Station Improvements,' and sheets C308 (Proposed Site Improvements – Case Lift Station), C309 (Case LS Plan and Section Views), E111 (Case Street LS Electrical Details) and I107 (Case LS Control Panel Upgrades) show improvements and control panel upgrades. Please confirm whether Case Lift Station is to be decommissioned or improved, and if decommissioned, which of C308/C309/E111/I107 remain in the Work.
    A. *The Case Lift Station is intended to be decommissioned. The Bid Form has been modified to read "Case Lift Station Decommissioning" to match the contract items and avoid confusion. Please see the attached modified Bid Form* ***(Attachment No. 3).***
16. Q: (Contractor Question) The Project Manual contains no Division 07 (Thermal and Moisture Protection) and no Division 22 (Plumbing). Section 07 92 00 Joint Sealants is referenced by 03 30 00, 13 34 20 and 40 05 06; Section 07 84 00 Firestopping is referenced by 26 05 19 and 26 05 33.13; Section 22 10 00 is referenced by 40 05 18 for cleanouts. The Work includes a new building envelope (Alternate #2 and Item 7), fire-rated wall and ceiling assemblies, an emergency eyewash (Alternate #1), drains and drip-pan piping. Please issue the missing sections or confirm that sealants, flashing, roofing accessories, firestopping and plumbing are to be provided under the Contractor's delegated design to code minimum, and identify the plumbing fixture and drain requirements at the screw press area.
    A. *Contractor to work with Delegated Design designer to meet minimum code requirements. See updated C104A for drain requirements at the screw press area.*
17. Q: (Contractor Question) Section 40 05 16 Para. 3.1.B requires insulation 'as specified in Section 40 42 00' where shown; Sections 40 05 16 Para. 2.2.E.2.b and 40 05 18 Para. 2.2.F.2.b require steel pipe sleeves 'meeting the requirements of Section 40 05 17.' Neither Section 40 42 00 nor 40 05 17 is in the Project Manual. Please confirm whether any process piping is to be insulated (and where), and provide the steel sleeve requirements or confirm ductile iron sleeves per AWWA C110 are acceptable at all non-wetted wall penetrations.
    A. *Unless otherwise noted on the plans, ductile iron sleeves per AWWA C110 are acceptable for all above-grade and exposed process piping.*
18. Q: (Contractor Question) Section 43 21 22 states that the Short Street Lift Station pump parameters 'were not designed by DCCM' and are 'based on historical data provided by the Owner and A Triad Associates (March 2024) … Preliminary Engineering Report,' with the remaining parameters 'based on coordination with vendors given the current pump plate data.' Please (a) provide the force main length, diameter, material and static lift for Short Street and Bank Lift Stations so the pump supplier can verify the system curve; (b) make the Triad PER available to bidders; and (c) confirm who bears responsibility if the specified duty point (200 gpm at 59 ft TDH, 110 ft shutoff, 6.5 HP max) cannot be met by the listed manufacturers or does not match actual system conditions, given the 5-year warranty in Para. 1.9.
    A. *Please see the attached PER prepared by Triad Associates (dated March 2023). This document is to be used as a reference only. Coordinate with the operator, Patrick*

Kendall (765-667-6136 or patrickkendall@sweetser.in), for current pump nameplate information for vendor coordination.

19. Q: (Contractor Question) The Work modifies existing WWTP structures, existing control panels (I103) and existing lift station wet wells and electrical services. Please make available to bidders the existing WWTP record drawings, the existing lift station as-built drawings (Bank, Eagle Drive, Short Street, Kelly Drive, Case), the existing control panel drawings, and any recent condition assessment of the roof, trusses and sheathing referenced under Allowance #1 (mold remediation and spot repairs).
    A. *Please see the attached bid set plans but note these are not as-builts. For more information, please contact the Town to schedule a site visit.*
20. Q: (Contractor Question) The drum screen is specified as Parkson Hycor Rotostrainer RSA 2524 'or approved equal,' the screw press and shaftless conveyor as FKC Co. Ltd. 'or approved equal,' and the only listed eccentric plug valve manufacturer is DeZurik. ITB 11.01 states substitutes and or-equals will not be considered until after the Effective Date of the Contract. Please confirm whether any alternate manufacturers for the drum screen, screw press system or plug valves will be pre-approved by addendum prior to bid, so that bidders price on a common basis, and confirm the screw press performance test basis (46 71 46 Part 1 Design Requirements) that an alternate would have to meet.
    A. *Contractor responsible to verify performance of "or-equal" vendor is in compliance with project manual requirements. See section 46 71 46 Part 1 Section D for performance requirements.*
21. Q: (Contractor Question) Sheet S401 is titled 'Solar Feasibility Reinforcement Concept' on the T001 index and 'Truss Reinforcement for Solar Panels' in its title block. No bid item or specification section references solar panels or truss reinforcement for solar loading. Please confirm whether the work shown on S401 is part of the Contract and, if so, under which bid item.
    A. *Solar improvements have been removed from the project scope. S401 has been renamed properly and included as an attachment to this addendum.*
22. Q: (Contractor Question) Bid Item 6 (Dewatering and Temporary Flow Control / Bypass) and each lift station Alternate include bypass pumping, but the documents do not state design bypass flows, durations or allowable shutdown windows for any lift station, the WWTP headworks (drum screen installation), or the grinder/LPS connections. Please provide peak and average flows to be bypassed at each lift station and at the WWTP, the maximum permitted interruption, and whether the Owner will operate existing pumps or make Owner personnel available during bypass operations (ref. 01 10 00 Para. 1.6.C 48-hour notice; SC-7.12.A.6 14-day shutdown notice).
    A. *See plan sets for average design flows for each lift station and WWTP. The Owner will have personnel available during bypass operations.*
23. Q: (Contractor Questions) SC-7.08.B states the Owner will have obtained the IDEM Construction Permit and easements. The Work includes a new post-frame building under the Contractor's delegated design (Alternate #2). Please confirm who obtains and pays for the Indiana Construction Design Release (State Building Commissioner), local building and electrical permits, and the Town of Sweetser road cut permits (Exhibit L) for the grinder pump and LPS connections, and whether permit fees are waived by the Owner.
    A. *There will be no CDR for this project. The Town does not have any local building or electrical permits. The contractor is responsible for the Town of Sweetser Road Cut Permits.*

24. Q: (Contractor Question) Mandatory Allowance #1 ($120,000, Spot Repairs and Mold Remediation) covers roof, sheathing and truss repairs 'at the discretion of the Town.' Please confirm (a) whether a mold assessment or roof condition report exists and will be issued; and (b) whether the mold remediation work requires a licensed remediation contractor and clearance testing, and who pays for the testing.
    A. *Please see the attached CE Solutions report but note that the report indicates full replacement needed; the allowance only covers for select areas of impacted roof of which need to be coordinated between the Contractor and the Owner. The Contractor is responsible for proper mold remediation and the cost of the testing needs to come from the allowance cost.*
25. Q: (Contractor Question) SC-3.03.B.1.c states that in case of conflict, drawings govern over specifications. Please confirm this precedence also applies to conflicts between the Bid Form / Section 01 20 00 item descriptions and the drawings (e.g., RFI items above regarding Case Lift Station and the Item 7 / Alternate #2 building envelope), and confirm the order of precedence between the Bid Form, Instructions to Bidders and Section 01 20 00 where they disagree.
    A. *Yes drawings govern over specifications and the Addenda supersede everything.*
26. Q: (Contractor Question) The overhead door at the proposed screw press building is called out two different ways on two drawings. Sheet C103 shows a "PROP. 12'X10' ROLL-UP GARAGE DOOR, C1D2 RATED." Sheet A101 shows a "PROPOSED 12'-0" X 9'-0" INSULATED STANDARD COMMERCIAL TYPE METAL ROLL UP DOOR." The two differ in clear opening height (10'-0" versus 9'-0") and, more significantly, in rating: a Class 1 Division 2 rated door and operator is a hazardous-location assembly at materially greater cost than a standard commercial door. SC-3.03.B.1.c establishes that the drawings govern over the specifications but does not address a conflict between two drawings. Please confirm (a) the required clear opening dimensions; (b) whether a Class 1 Division 2 rating is required for the door, the operator, or both; and (c) the extent of the classified area at the screw press room, since the M200 exhaust fan schedule also requires a spark-resistant Type B fan with an explosion-proof motor.
    A. *These two doors are not the same door. The door on C103 is on the existing WWTP building and the operator will need to be C1D2. The door on A101 is for the proposed screw press building and needs to be one hour fire rated but the operator does not need to be C1D2.*
27. Q: (Plan Room Question) Confirm that the bid date and time (September 24th, 2026 at 7:00PM) are unchanged? Please provide the non-mandatory pre-bid attendance list or plan holders list/bidders list. Has an addendum been issued, and if so, please attach them to this response?
    A. *Bid due date is September 24th, 2026 at 7:00 PM. You can find the list of pre-bid attendees as an attachment to Addendum #1. Addendum #1 has not been released and you can get it once it is posted to our website.*

+ + END OF ADDENDUM + +

PLEASE ACKNOWLEDGE THIS ADDENDUM IN THE BID FORM YOU SUBMIT.

Certified:_____
Engineer

Date:_____09/15/2026_____

ATTACHMENT NO. 1

PRE-BID CONFERENCE MEETING MINUTES AND SIGN IN SHEET

PRE-BID MEETING MINUTES

Client: Town of Sweetser, Indiana
Project Name: Sweetser Wastewater Improvements
Project ID: 400-6314
Meeting Location: Sweetser Town Hall
Date: September 8th, 2026

Goals

- Introductions
- Scope of Work
- Document Availability
- Contract Milestones
- Addenda
- Special Considerations
- General Questions/Discussion

Introductions

- Town of Sweetser
  - *Patrick Kendall, WWTP Operator*
- DCCM
  - *Ricardo Paredes, Project Manager*
  - *Christian Charlson, Staff Engineer*
- *Kleinpeter Consulting*
  - *Justin Kleinpeter*
- Contractors Present
  - *Attached.*
- Sign-in Sheet
  - *Attached.*

Project Funding Requirements

- *Kleinpeter Consulting went through the requirements outlined in the attached Pre-Bid Conference Guide handout from the Office of Community and Rural Affairs.*

Scope of Work

- BASE BID
  - Wastewater Treatment Plant Improvements
    - Mechanical and Electrical Control Improvements including the proposed electrical room.

        - Added firewalls *(blower/UV room, WWTP and garage, and proposed electrical room and WWTP)* and fire rated ceiling w. associated structural improvements *for the blower/UV room*.
- ALTERNATES
        - Screw Press Equipment @ WWTP
            - Screw press skid and associated equipment, including any life and safety equipment, EIC improvements (except the building envelope and foundations).
        - Screw Press Room @ WWTP
            - Only the building envelope and foundations*, and fire rated wall between screw press room and WWTP.*
        - Ceiling Improvements WWTP
            - All ceiling improvements and structural improvements - *excluding fire rate ceiling and structural roof improvements for the blower/UV room.*
        - Bank LS Improvements
            - EIC improvements, site improvements, wet well lining, pumps.
        - Case LS Improvements
            - Decommissioning efforts and salvaging of EIC equipment for reuse
        - Eagle Drive LS Improvements
            - Lining of WW, hatches, and minor EIC improvements
        - Short Street LS Improvements
            - Site improvements, EIC improvements, pumps.
        - Kelly Drive LS Improvements
            - Site improvements, EIC improvements, meter vault and equipment improvements
        - Low Pressure Sewer Improvements
            - Three (3) new grinder stations, in-line and terminal flushing stations, connections to existing FM
            - *This alternative will reuse the existing 3-inch lines and 2.5-inch lines that are currently in use.*

- ALLOWANCE
    - Spot Repairs and Mold Remediation @ the WWTP
        - At discretion and coordinated with Owner. Mold remediation and wood roof sheathing replacement at the WWTP.

Document Availability

- DCCM Online Plan Room
    - Electronic documents can be downloaded for free from: https://dccm.com/public-documents/

- *DCCM noted that they do not coordinate with plan rooms and the most accurate information will be available at the website listed above*.

Milestone	Date
Pre-bid Meeting	September 8th, 2026
Last Day for Questions	September 15th, 2026
Final Addendum	**September 17th, 2026**
Open Bids	**September 24th, 2026**
Anticipated Notice to Proceed	**December 2026**

Bid Overview

- Bids Due – **September 24th, 2026 @ 7PM (Local Time)**
  - Bid Location – Sealed bids submitted to 113 N Main Street, Sweetser, IN 46987.
  - Bid Opening will occur at 7:00 PM during the Sweetser Town Council Meeting
  - *Bids to be delivered to the Town Council and will be opened during the meeting.*
- Contract
  - Lump Sum
  - Mandatory Alternates (Lump Sum + Allowance)
- Documents due at Bid
  - Completed Bid Form – Section 00 41 13
  - Required Bid Security
  - List of Proposed:
    - Subcontractors
    - Suppliers
  - List of Project References
  - Bidder's state or contractor license number
  - Acknowledgement of Addendum(s)
  - Contractor's Bid for Public Work – Form 96
  - E-Verify Affidavit
- *There is a 90-day bid hold. Right now, the bids should be based off of the wage determination included in the Contract Documents but at the end of the bid hold, the wages could have changed and updates should be made. Project is OCRA and SRF funded, and it has a target loan closing of mid-November 2026.*

Contract Milestones

- Substantial Completion – 548 days
- Final Completion – 578 days

- Liquidated Damages: $1,500 per day for missing Substantial Completion. $1500 per day for missing Final Completion.

Addenda

- All questions to be sent in writing to Ricardo Paredes no later than Tuesday, September 15th, 2026:
    - Email: rparedes@dccm.com
- Addendum No. 1
    - Issued September 17th, 2026.
    - Updates
        - Any Clarifications on Plans as discussed today
        - Q/As
        - Meeting Minutes

General Questions/Discussion

- Funding by an SRF Loan and OCRA Grant money.
- Project must be BABAA, AIS, and Davis-Bacon compliant.
- IDEM Permit was secured on July 31st, 2026.
- Utility locations will need to be confirmed in the field. Contractor responsible to pothole along CR300W for all terminal and in-line flushing station locations.
- Need to ensure that access is maintained and roads are not closed.
- Ensure there is a good pre-construction video to ensure that restoration is adequate and brings the sites to existing conditions.
- For clarification, the 20-yard dumpsters outside of the proposed screw press room are existing and need to be relocated to the location shown in the plans.
- *Sweetser will facilitate locating Town-Owned (storm and sanitary) utilities.*
- *Dumpsters must remain functional during construction and the contractor is to coordinate with operator for temporary relocation.*
- *Contractor Questions*
    - *Will the lowest bidder be based on the price of the base bid and all of the alternates or will it only be determined based on the base bid and then alternates will be discussed with the lowest bidder?*
        - *DCCM to discuss with Town and provide clarifying response as part of the forthcoming addendum.*
    - *Is the screw press building a Class I Div I building?*
        - *No, based on the air exchanges we are able to rated down the space from a C1D2 space to a non-classified space per NFPA 820.*

DCCM

Sweetser Wastewater Improvements Project
Pre-Bid Meeting
Town of Sweetser

ATTENDANCE SHEET
(PLEASE PRINT)

September 8th, 2026 @ 11:00AM – Sweetser Town Hall

NAME	COMPANY	PHONE	E-MAIL
Christian Charlson	DCCM	317-588-1755	cchartson@dccm.com
Ricardo Paredes	DCCM	317-588-1785	rparedes@dccm.com
Patricle Kendall	Sweetser	765-667-6136	patrickkendall@sweetser.in
Kyle Starkey	Madbox Industrial Group	260-600-4411	kstarkey@Madboxindustrial.com
David Geis	Geis Contracting LLC	260-348-7785	David.Geis@geiscontracting.com
Justin Kleinpeter	Kleinpeter Consulting	812-530-6682	justin@kleinpeterconsulting.com
Brian Coryell	TCI	317-867-3462 C-765-603-0269	brian.coryell@t.c.i.net estimating@t-c-i.net
ADAM SCHANTZ	BL ANDERSON	612-247-8305	ASCHANTZ@BLANDERSON.com
Tyler Boggess	ATEC	765-841-0346	t.boggess@atec-electric.com
Jay Jeffries	Patterson Horth	765-346-3396	jejeffries@pattersonhorth.com
Russell Jacobs	Crosby.	260 410 8247	Rjacobs@recrosby.com.
JON COLYER	REX COLLINS ELECTRIC	765-517-2031	JCOLYER@REXCOLLINSELECTRIC.COM
Andrew Jones	CMRCC	574-527-9352	ajones@cmrcc.com

DCCM

NAME	COMPANY	PHONE	E-MAIL
Cristian Cardenas	CMRCC	574-526-4227	ccardenas@cmrcc.com
Brad Yoder	R. Yoder Const.	574-305-0698	brad@ryoderconstruction.com

Pre-Bid Conference Guide

For Construction Projects
funded wholly or partially by the
Community Development Block Grant
Program.

Grant Services Division
One North Capitol, Suite 600
Indianapolis, Indiana 46204

800-824-2476

Revised November 2023

DAVIS-BACON REQUIREMENTS

Wages/Worker Classifications

All contractors and subcontractors must pay their workers no less than the hourly wages listed on federal wage determination for each classification of work performed on this project. In addition, if the applicable wage determination contains an hourly fringe benefit amount, the worker must receive benefits equal to that amount or a cash equivalent. All workers must be paid, in full, at least once a week. These requirements apply to salaried workers employed on this project engaged in physical or manual construction labor. It is the responsibility of the general contractor to clearly communicate all labor standards and Davis-Bacon requirements to all subcontractors employed on this project. All workers must be paid at an hourly rate for the type of work performed.

Only the classifications listed in the applicable wage determination or apprentices may be used on this project. Helpers or trainees may not perform work or services on this project. Laborers are not permitted to perform any skilled work which falls under the classification of another trade. For example, a laborer may not perform any electrical, carpentry, plumbing, sheet metal, etc. work on this project. If an employee performs more than one classification per week on this project, that employee should be listed twice showing the division of work on separate lines of the payroll.

All contractors and subcontractors having questions regarding the classification of workers shall direct their inquiries to the Grant Administrator.

Fringe Benefits

Contractors and subcontractors must submit documentation to the Grantee through the Grant Administrator to verify the type and the amounts paid into a bona fide fringe benefit program. The following are examples of bona fide fringe benefit plans:

1) Health, life, dental, vision or other similar insurance premiums paid by the employer;
2) Pension or retirement contributions *made by the employer* into a plan recognized by the Internal Revenue Service;
3) Expenses of certain recognized training programs;
4) Vacation and holiday pay may be considered as long as the employee would receive any unused amounts at termination of employment.

NOTE: Payroll deductions required by law (e.g., social security, worker's compensation, unemployment insurance, Federal/State/Local taxes, etc.) are not considered fringe benefits under Davis-Bacon law.

The following are NOT eligible bona fide fringe benefits:

1) Travel time;
2) Bonus payments;
3) Use of company tools or equipment;
4) Use of company vehicle;
5) Uniforms or safety shoes
6) Union Dues; Contributions into industry campaigns, marketing or advancement;
7) Substance Abuse Testing/Training programs

Independent subcontractors and self-employed owners are considered to be subcontractors of the Prime contractor. They are subject to the same requirements as are all subcontractors. Independent subcontractors and self-employed owners must submit a Certified Payroll Report or be listed on another contractors' weekly payroll following the documentation guidelines as referenced by DOL, WHD-347.

If the contractor or its subcontractors do not pay the proper hourly rate and fringe benefit on this project, the grantee shall withhold a necessary amount from the prime contractor until restitution is made. The prime contractor may be held liable for liquidated damages if its workers or those of subcontractors on this project are not paid the proper hourly wage and benefit.

to advise Indiana Career Connect that the position is no longer available. Contractors are required to give first consideration to any Section 3 residents or Businesses for new positions, training, or subcontracting opportunities. Section 3 residents or businesses are not guaranteed employment or contracting opportunities under Section 3. Section 3 residents must demonstrate that they meet the qualifications for new employment opportunities created as a result of the federally assisted project. Section 3 business concerns must submit evidence to the satisfaction of the party awarding the contract to demonstrate that they are responsible firms and have the ability to perform successfully under the terms and conditions of the proposed contract.

In all instances where new positions are being created, the contractor must document the results of any Section 3 residents contacted regarding the position and the results of that contact. To ensure compliance with this federal regulation, all contractors and subcontractors (whose contract amount exceeds $100,000) must complete a Section 3 Compliance Report when work on the project called for in their contract is complete. Any documentation regarding contacts or consideration of Section 3 applicants must be maintained by the contractor and provided to the Civil Rights/Section 3 Officer with the Compliance Report.

BUY AMERICA PREFERENCE

The Build America Buy America Act provides, to the greatest extent possible, for early coordination with engineers/architects to incorporate products that meet Buy America Preference in the design phase of infrastructure projects.

All contractors who receive federal financial assistance for an infrastructure project which includes construction, alterations, or repairs are subject to the BABA unless a waiver is in place. The Buy America Preference (BAP) requires the use of iron and steel, construction materials and manufactured goods produced in the United States.

Bidders must provide cost estimates based on the most current American made products available. It is the responsibility of the grantee to ensure that BABA requirements are included in bid advertisements. *Form 17: Sample Invitation for Bid Publication* has been updated to reflect Buy America Preference requirements. The Buy America Preference must be included in all subawards, contracts, and purchase orders for the work performed, or products supplied under an OCRA award.

OTHER FEDERAL REQUIREMENTS

Title VI of the Civil Rights Act of 1964 states that no person shall, on the grounds of race, color, or national origin, be excluded from participation in, be denied the benefits of, or be subjected to discrimination under any program or activity receiving federal financial assistance.

Title VII of the Civil Rights Act of 1964 prohibits discrimination in hiring, promotion and other employment practices on the basis of race, color, religion, sex, or national origin.

Section 109 of the Housing and Urban Development Act of 1974 prohibits discrimination on the basis of race, color, national origin, disability, age, religion and sex within Community Development Block Grant programs or activities.

Title III of the Americans with Disabilities Act prohibits discrimination based on "disability" by requiring that places of public accommodation be readily accessible to and useable by persons with disabilities.

The Architectural Barriers Act of 1968 requires that a project meet at least the minimum requirements of accessibility. A Certificate of Accessibility must be provided to the Grantee with a copy to OCRA on or before the completion of the project.

Section 504 of the Rehabilitation Act of 1974 states that a contractor or subcontractor may not discriminate against an otherwise qualified individual from participating in or enjoying the benefits of this project as a result of a physical handicap.

ATTACHMENT NO. 2

IDEM CONSTRUCTION PERMIT

INDIANA DEPARTMENT OF ENVIRONMENTAL MANAGEMENT

100 N. Senate Avenue • Indianapolis, IN 46204
(800) 451-6027 • (317) 232-8603 • Fax (317) 233-6647 • www.idem.IN.gov

Mike Braun
Governor

Clint Woods
Commissioner

July 31, 2026

VIA ELECTRONIC MAIL

Kyle Taylor
Town of Sweetser
113 N Main Street
Sweetser, IN 46987

Dear Mr. Taylor:

Re: 327 IAC 3 Construction
Permit Application
Sweetser Wastewater Improvements
SRF Project Permit Approval No. L-0816
Sweetser, Indiana
Grant County

The application, plans and specifications, and supporting documents for the above-referenced project have been reviewed and processed in accordance with rules adopted under 327 IAC 3. Enclosed is the Construction Permit (Approval No. L-0816), which applies to the construction of the above-referenced proposed water pollution treatment/control facility improvements located at the site of the existing treatment facility at 0923 North County Road 400 West in Marion, Indiana.

Please review the enclosed permit carefully and become familiar with its terms and conditions. In addition, it is imperative that the applicant, consulting architect/engineer (A/E), inspector, and contractor are aware of these terms, conditions, and reporting and testing requirements.

It should be noted that any person affected or aggrieved by the agency's decision in authorizing the construction of the above-referenced facility may, within fifteen (15) days from date of mailing, appeal by filing a request with the Office of Administrative Law Proceedings for an adjudicatory hearing in accordance with IC 4-21.5-3-7 and IC 13-15-6. The procedure for appeal is outlined in more detail in Part III of the attached construction permit.

The approval applies to the technical acceptability of the submitted plans and does not imply that the entire project is eligible for SRF financing or that funds are available.

Plans and specifications were prepared by DCCM, certified by Ricardo Juan Paredes Aronsohn, P.E., and submitted for review on June 29, 2026, with additional information submitted on July 24, and July 29, 2026.

Any technical/engineering questions concerning this permit may be addressed to Lauren Yumibe of our staff, at 317/233-1764.

Sincerely,

Kevin D. Czerniakowski

Kevin D. Czerniakowski, P.E.
Section Chief
Facility Construction and
Engineering Support Section
Office of Water Quality

Project No. SRF-0861
Enclosures
cc: Grant County Health Department
Ricardo Juan Paredes Aronsohn, P.E., DCCM

INDIANA DEPARTMENT OF ENVIRONMENTAL MANAGEMENT
AUTHORIZATION FOR CONSTRUCTION OF
WATER POLLUTION TREATMENT/CONTROL FACILITY
UNDER 327 IAC 3

DECISION OF APPROVAL

The Town of Sweetser, in accordance with the provisions of IC 13-15 and 327 IAC Article 3, is hereby issued a permit to construct the proposed water pollution treatment/ control facility improvements to be located at the site of the existing treatment facility at 0923 North County Road 400 West in Marion, Indiana. The permittee is required to comply with requirements set forth in Parts I, II and III hereof. The permit is effective pursuant to IC 4-21.5-3-4(d). If a petition for review and a petition for stay of effectiveness are filed pursuant to IC 13-15-6, an Environmental Law Judge may be appointed for an adjudicatory hearing. The force and effect of any contested permit provision may be stayed at that time.

NOTICE OF EXPIRATION DATE

Authorization to initiate construction of these water pollution treatment/control facility improvements shall expire at midnight one year from the date of issuance of this construction permit. In order to receive authorization to initiate construction beyond this date, the permittee shall submit such information and forms as required by the Indiana Department of Environmental Management. It is requested that this information be submitted sixty (60) days prior to the expiration date to initiate construction. This permit shall be valid for a period of five (5) years from the date below for full construction completion.

Issued on July 31, 2026, for the Indiana Department of Environmental Management.

Kevin D. Czerniakowski

Kevin D. Czerniakowski, P.E.
Section Chief
Facility Construction and
Engineering Support Section
Office of Water Quality

WATER POLLUTION TREATMENT/CONTROL FACILITY DESCRIPTION

The Sweetser Wastewater Treatment Plant is a Class I, 0.20 MGD treatment facility consisting of influent flow measurement, influent screening, single stage nitrification activated sludge, clarification, ultraviolet light disinfection, post aeration, effluent flow measurement, and aerobic digestion. Solids are hauled off-site and landfilled by contract haul. The facility will replace its existing drum screen, add a screw press to their sludge handling train, and conduct several electrical and controls upgrades both onsite and throughout its connecting lift stations. The plant rating is unchanged.

The proposed screen shall be a rotary drum screen with a capacity of 0.865 MGD, equivalent to the maximum flow capacity of the plant. A variance is granted to allow installation of the proposed drum screen without redundancy and a preceding coarse bar screen. In the event of failure, the screen will be bypassed, and flows will be directed towards the flow diversion structure. Pursuant to headworks improvements, the influent flow meter will also be replaced and installed in a meter vault.

The facility will add a screw press to replace its current geobags as part of sludge dewatering. Flows will exit the existing aerobic digester building and flow into the screw press. Grinder pumps will convey drainage back to the treatment train. Dewatered sludge will be stored in existing 20-yard dumpsters for contract haul.

Modifications are proposed for the Kelly, Bank, Eagle Drive, and Short Street Lift Stations which shall consist of controls and structural upgrades. No modifications are proposed to their connecting force mains, save for the Kelly Lift Station to add a flow meter and bypass piping. Design pumping rates and total dynamic head are unchanged. The Case Lift Station will be decommissioned and replaced with 3 grinder pump stations at the connecting properties. Flushing stations will be installed every 1,500 feet of the converted force main to ensure flows are conveyed at a minimum fluid velocity of 2 ft/s. An alternate to technical standards per 327 IAC 3-6-32 is granted to permit the installation of low-pressure sewer of less than 4 inches in diameter for the grinder pump connections. The grinder pump stations shall be privately owned and maintained.

CONDITIONS AND LIMITATIONS TO THE AUTHORIZATION FOR CONSTRUCTION OF WATER POLLUTION TREATMENT/CONTROL FACILITY

During the period beginning on the effective date of this permit and extending until the expiration date, the permittee is authorized to construct the above-described water pollution treatment/control facility. Such construction shall conform to all provisions of State Rule 327 IAC 3 and the following specific provisions:

PART I

SPECIFIC CONDITIONS AND LIMITATIONS TO THE CONSTRUCTION PERMIT

Unless specific authorization is otherwise provided under the permit, the permittee shall comply with the following conditions:

1. Additional treatment facilities shall be installed if the proposed facilities prove to be inadequate or cannot meet applicable federal or state standards.

2. Any local permits required for this project, along with zoning or easement acquisition, shall be obtained before construction is initiated.

3. After construction, this agency shall be given advance notice of the start-up of the facilities.

4. If pollution or nuisance conditions are created, immediate corrective action will be taken by the permittee.

5. If construction is located within a designated floodway, a permit may also be required from the Department of Natural Resources prior to start of construction. It is the permittee's responsibility to coordinate with that agency and obtain any required approvals if applicable. Questions may be directed to the Technical Services Section, Division of Water at 317/232-4160.

6. If this project includes a change in design flow, addition of new treatment unit(s), or modification/removal of existing treatment unit(s), an NPDES Permit modification will likely be required. This would include any CSO treatment addition/modification. Questions may be directed to the NPDES Permit Section, Office of Water Quality at 317/233-0469

7. The sewage treatment plant must be capable of providing the same degree of treatment during construction as prior to of the existing facilities. If this is not feasible, the plans for reduced degree of treatment must be submitted to the Department of Environmental Management for consideration of approval.

Failure to meet guidelines as set forth in the above conditions could be subject to enforcement proceedings as provided by 327 IAC 3-5-3.

PART II

GENERAL CONDITIONS

1. No significant or material changes in the scope of the plans or construction of this project shall be made unless the following provisions are met:

    a. Request for permit modification is made 60 days in advance of the proposed significant or material changes in the scope of the plans or construction;

    b. Submit a detailed statement of such proposed changes;

    c. Submit revised plans and specifications including a revised design summary; and

    d. Obtain a revised construction permit from this agency.

2. This permit may be modified, suspended, or revoked for cause including, but not limited to the following:

    a. Violation of any term or conditions of this permit:

    b. Obtaining this permit by misrepresentation or failure to disclose fully all relevant facts.

3. Nothing herein shall be construed as guaranteeing that the proposed water pollution treatment/control facility shall meet standards, limitations or requirements of this or any other agency of state or federal government, as this agency has no direct control over the actual construction and/or operation of the proposed project.

PART III

NOTICE OF RIGHT TO ADMINISTRATIVE REVIEW

Anyone wishing to challenge this construction permit must do so by filing a Petition for Administrative Review with the Office of Administrative Law Proceedings (OALP), and serving a copy of the petition upon IDEM. The requirements for filing a Petition for Administrative Review are found in IC 4-21.5-3-7, IC 13-15-6-1 and 41 IAC 2-2-1. A summary of the requirements of these laws is provided below.

A Petition for Administrative Review must be filed with the Office of Administrative Law Proceedings (OALP) within fifteen (15) days of the issuance of this notice (eighteen (18) days if notice was received by U.S. Mail), and a copy must be served upon IDEM. Addresses are:

Director
Office of Administrative Law Proceedings
Indiana Government Center North
Room 802
100 North Senate Avenue
Indianapolis, Indiana 46204

Commissioner
Indiana Department of Environmental Management
Indiana Government Center North
Room 1301
100 North Senate Avenue
Indianapolis, Indiana 46204

The petition must contain the following information:

1. The name, address and telephone number of each petitioner.
2. A description of each petitioner's interest in the permit.
3. A statement of facts demonstrating that each petitioner is:
    a. a person to whom the order is directed;
    b. aggrieved or adversely affected by the permit; or
    c. entitled to administrative review under any law.
4. The reasons for the request for administrative review.
5. The particular legal issues proposed for review.
6. The alleged environmental concerns or technical deficiencies of the permit.
7. The permit terms and conditions that the petitioner believes would be appropriate and would comply with the law.
8. The identity of any persons represented by the petitioner.
9. The identity of the person against whom administrative review is sought.
10. A copy of the permit that is the basis of the petition.
11. A statement identifying petitioner's attorney or other representative, if any.

Failure to meet the requirements of the law with respect to a Petition for Administrative Review may result in a waiver of the Petitioner's right to seek administrative review of the permit. Examples are:

1. Failure to file a Petition by the applicable deadline;
2. Failure to serve a copy of the Petition upon IDEM when it is filed; or
3. Failure to include the information required by law.

If Petitioner seeks to have a permit stayed during the administrative review, he or she may need to file a Petition for a Stay of Effectiveness. The specific requirements for such a Petition can be found in 41 IAC 2-2-1 and 41 IAC 2-2-3.

Pursuant to IC 4-21.5-3-17, OALP will provide all parties with notice of any pre-hearing conferences, preliminary hearings, hearings, stays, or orders disposing of the review of this action. Those who are entitled to notice under IC 4-21.5-3-5(b) and would like to obtain notices of any pre-hearing conferences, preliminary hearings, hearings, stays, or orders disposing of the review of this action without intervening in the proceeding must submit a written request to OALP at the address above.

More information on the review process is available at the website for the Office of Administrative Law Proceedings at http://www.in.gov/oalp.

ATTACHMENT NO. 3

REVISED 00 41 13

BID FORM

Sweetser, IN

Sweetser Wastewater Improvements

TABLE OF CONTENTS

Page

ARTICLE 1 – Bid Recipient 1
ARTICLE 2 – Bidder's Acknowledgements 1
ARTICLE 3 – Bidder's Representations 1
ARTICLE 4 – Bidder's Certification 2
ARTICLE 5 – Basis of Bid 3
ARTICLE 6 – Time of Completion 5
ARTICLE 7 – Attachments to this Bid 5
ARTICLE 8 – Defined Terms 6
ARTICLE 9 – Bid Submittal 7

ARTICLE 1 – BID RECIPIENT

1.01 This Bid is submitted to:

Town of Sweetser Town Council

113 N Main Street, PO Box 329, Sweetser, IN 46987

1.02 The undersigned Bidder proposes and agrees, if this Bid is accepted, to enter into an Agreement with Owner in the form included in the Bidding Documents to perform all Work as specified or indicated in the Bidding Documents for the prices and within the times indicated in this Bid and in accordance with the other terms and conditions of the Bidding Documents.

ARTICLE 2 – BIDDER'S ACKNOWLEDGEMENTS

2.01 Bidder accepts all of the terms and conditions of the Instructions to Bidders, including without limitation those dealing with the disposition of Bid security. This Bid will remain subject to acceptance for 90 days after the Bid opening, or for such longer period of time that Bidder may agree to in writing upon request of Owner.

ARTICLE 3 – BIDDER'S REPRESENTATIONS

3.01 In submitting this Bid, Bidder represents that:

A. Bidder has examined and carefully studied the Bidding Documents, and any data and reference items identified in the Bidding Documents, and hereby acknowledges receipt of the following Addenda:

Addendum No.	**Addendum, Date**
_____	_____
_____	_____
_____	_____
_____	_____

B. Bidder has visited the Site, conducted a thorough, alert visual examination of the Site and adjacent areas, and become familiar with and satisfied itself as to the general, local, and Site conditions that may affect cost, progress, and performance of the Work.

C. Bidder is familiar with and has satisfied itself as to all Laws and Regulations that may affect cost, progress, and performance of the Work.

D. Bidder has carefully studied all: (1) reports of explorations and tests of subsurface conditions at or adjacent to the Site and all drawings of physical conditions relating to existing surface or subsurface structures at the Site that have been identified in the Supplementary Conditions, especially with respect to Technical Data in such reports and drawings, and (2) reports and drawings relating to Hazardous Environmental Conditions, if any, at or adjacent to the Site that have been identified in the Supplementary Conditions, especially with respect to Technical Data in such reports and drawings.

E. Bidder has considered the information known to Bidder itself; information commonly known to contractors doing business in the locality of the Site; information and observations obtained from visits to the Site; the Bidding Documents; and any Site-related reports and drawings identified in the Bidding Documents, with respect to the effect of such information, observations, and documents on (1) the cost, progress, and performance of the Work; (2)

the means, methods, techniques, sequences, and procedures of construction to be employed by Bidder; and (3) Bidder's safety precautions and programs.

F. Bidder agrees, based on the information and observations referred to in the preceding paragraph, that no further examinations, investigations, explorations, tests, studies, or data are necessary for the determination of this Bid for performance of the Work at the price bid and within the times required, and in accordance with the other terms and conditions of the Bidding Documents.

G. Bidder is aware of the general nature of work to be performed by Owner and others at the Site that relates to the Work as indicated in the Bidding Documents.

H. Bidder has given Engineer written notice of all conflicts, errors, ambiguities, or discrepancies that Bidder has discovered in the Bidding Documents and confirms that the written resolution thereof by Engineer is acceptable to Bidder.

I. The Bidding Documents are generally sufficient to indicate and convey understanding of all terms and conditions for the performance and furnishing of the Work.

J. The submission of this Bid constitutes an incontrovertible representation by Bidder that Bidder has complied with every requirement of this Article, and that without exception the Bid and all prices in the Bid are premised upon performing and furnishing the Work required by the Bidding Documents.

ARTICLE 4 – BIDDER'S CERTIFICATION

4.01 Bidder certifies that:

A. This Bid is genuine and not made in the interest of or on behalf of any undisclosed individual or entity and is not submitted in conformity with any collusive agreement or rules of any group, association, organization, or corporation;

B. Bidder has not directly or indirectly induced or solicited any other Bidder to submit a false or sham Bid;

C. Bidder has not solicited or induced any individual or entity to refrain from bidding; and

D. Bidder has not engaged in corrupt, fraudulent, collusive, or coercive practices in competing for the Contract. For the purposes of this Paragraph 4.01.D:

1. "corrupt practice" means the offering, giving, receiving, or soliciting of any thing of value likely to influence the action of a public official in the bidding process;

2. "fraudulent practice" means an intentional misrepresentation of facts made (a) to influence the bidding process to the detriment of Owner, (b) to establish bid prices at artificial non-competitive levels, or (c) to deprive Owner of the benefits of free and open competition;

3. "collusive practice" means a scheme or arrangement between two or more Bidders, with or without the knowledge of Owner, a purpose of which is to establish bid prices at artificial, non-competitive levels; and

4. "coercive practice" means harming or threatening to harm, directly or indirectly, persons or their property to influence their participation in the bidding process or affect the e execution of the Contract.

ARTICLE 5 – BASIS OF BID

5.01 Bidder will complete the Work in accordance with the Contract Documents for the following price(s):

BASE BID					
Item No.	**Description**	**Unit**	**Estimated Quantity**	**Unit Price**	**Total Price**
1	Mobilization and Demobilization	LS	1		
2	Maintenance of Traffic	LS	1		
3	Construction Engineering	LS	1		
4	Erosion and Sediment Control	LS	1		
5	Site Grading and Restoration	LS	1		
6	Dewatering and Temporary Flow Control (Bypass)	LS	1		
7	Wastewater Treatment Plant Improvements	LS	1		

Bidder acknowledges that (1) each Bid Unit Price includes an amount considered by Bidder to be adequate to cover Contractor's overhead and profit for each separately identified item, and (2) estimated quantities are not guaranteed, and are solely for the purpose of comparison of Bids, and final payment for all unit price Bid items will be based on actual quantities, determined as provided in the Contract Documents.

Total Base Bid Price $ _____

MANDATORY ALTERNATES					
Alternate Item No.	**Description**	**Unit**	**Estimated Quantity**	**Alternate Unit Price**	**Alternate Total Price**
1.	Screw Press Equipment Improvements	LS	1		
2.	Screw Press Building Improvements	LS	1		
3.	Ceiling Improvements	LS	1		
4.	Bank Lift Station Improvements	LS	1		
5.	Case Lift Station Decommissioning	LS	1		
6.	Eagle Drive Lift Station Improvements	LS	1		
7.	Short Street Lift Station Improvements	LS	1		
8.	Kelly Drive Lift Station Improvements	LS	1		
9.	Low Pressure Sewer Improvements	LS	1		

Total Mandatory Alternate Price $ _____

MANDATORY ALLOWANCES					
Allowance Item No.	**Description**	**Unit**	**Estimated Quantity**	**Allowance Unit Price**	**Allowance Total Price**
1.	Spot Repairs and Mold Remediation	ALLOW	1	$120,000	$120,000

Total Allowance Price $ _____

Proposed increase or decrease in price for the Bid Alternates listed above will ~~not~~ be considered in determination of the lowest responsive and responsible bid.

The undersigned understands that after a contract is awarded, the Owner may select items of the Alternate Bids listed above. If awarded the contract, the Bidder agrees to furnish and install any Owner selected Alternate items for the add or deduct indicated. The total base bid will then be adjusted accordingly. The add or deduct amounts listed above are "installed" prices and take into consideration and include any cost of the design or construction changes that may be required as a result of selecting the Alternate.

Alternate Contract Item prices are subject to acceptance by the Owner, and rejection of one or more Alternate Contract Item prices will not invalidate acceptance of this Bid.

ARTICLE 6 – TIME OF COMPLETION

6.01 Bidder agrees that the Work will be substantially complete and will be completed and ready for final payment in accordance with Paragraph 15.06 of the General Conditions on or before the dates or within the number of calendar days indicated in the Agreement.

6.02 Bidder accepts the provisions of the Agreement as to liquidated damages.

ARTICLE 7 – ATTACHMENTS TO THIS BID

7.01 The following documents are submitted with and made a condition of this Bid:

A. Required Bid security;

B. List of Proposed Subcontractors;

C. List of Proposed Suppliers;

D. List of Project References;

E. Bidder's License No.: _____ demonstrating evidence of authority to do business in the state of Indiana.

F. Required Bidder Qualification Statement (Form 96) with supporting data;

G. E-Verify Affadavit;

SRF Required Documents

H. Wage/Fringe Benefit Certification (Exhibit J);

I. GPR Bid Breakdown (Exhibit E);

J. Nondiscrimination Compliance Form (Exhibit A);

K. Form OEE-1 (Exhibit D);

L. Form OEE-2 (Exhibit D);

M. Good Faith Efforts Worksheet (Exhibit D);

OCRA Required Documents

N. Davis-Bacon Act Provisions and Forms (Exhibit C)

O. BABA Compliance Forms (Exhibit K)

1. Forms are to be reviewed by Contractor.
2. Forms are to be filled out after Notice of Award has been issued to the selected bidder.

ARTICLE 8 – DEFINED TERMS

8.01 The terms used in this Bid with initial capital letters have the meanings stated in the Instructions to Bidders, the General Conditions, and the Supplementary Conditions.

ARTICLE 9 – BID SUBMITTAL

BIDDER: *[Indicate correct name of bidding entity]*

_____

By:
[Signature] _____

[Printed name] _____
(If Bidder is a corporation, a limited liability company, a partnership, or a joint venture, attach evidence of authority to sign.)

Attest:
[Signature] _____

[Printed name] _____

Title: _____

Submittal Date: _____

Address for giving notices:

_____

_____

_____

Telephone Number: _____

Fax Number: _____

Contact Name and e-mail address: _____

_____

Bidder's License No.: _____
(where applicable)

(NO TEXT THIS PAGE)

ATTACHMENT NO.4

REVISED 01 20 00

SECTION 01 20 00 - CONTRACT ITEMS

PART 1 - GENERAL

1.1 DESCRIPTION

A. The Section includes the Contract Items for the Project.

1.2 BASE BID CONTRACT ITEM 1 – MOBILIZATION AND DEMOBILIZATION

A. Description: The Work under this Contract Item includes all work necessary for the movement of personnel and equipment to and from the project site. This shall include the submittal of a Performance Bond, Payment Bond, Maintenance Bond [SC-6.01], Contractor's Insurance for Worker's Compensation [SC-6.03], Contractor's Commercial General Liability [SC-6.03], Automobile Liability [SC-6.03], Excess or Umbrella Liability [SC-6.03], Contractor's Professional Liability [SC-6.03], Owner's Liability Insurance [SC-6.04], and Property Insurance [SC-6.05].

B. Payment: Payment under Item 1 will be made at a Lump Sum Price.

1.3 BASE BID CONTRACT ITEM 2 – MAINTENANCE OF TRAFFIC

A. Description: The Work under this Contract Item includes construction and maintenance of all detours, routing of traffic, and signage necessary to install the sewer infrastructure to the lines and slopes shown on the Drawings, and specified herein in addition to all other work required or incidental thereto.

B. Payment: Payment under Item 2 will be made at a Lump Sum Price.

1.4 BASE BID CONTRACT ITEM 3 – CONSTRUCTION ENGINEERING

A. Description: The Work under this Contract Item includes the planning and management of the project complete with all labor, material, and equipment necessary, including contractor's field office/trailer ~~and INDOT Settlement Monitoring Plan for work done in INDOT Right of Way.~~

B. Payment: Payment under Item 3 will be made at Lump Sum Price.

1.5 BASE BID CONTRACT ITEM 4 – EROSION AND SEDIMENT CONTROL

A. Description: The Work under this Contract Item includes installing erosion and sediment control devices as shown on the Drawings and specified herein complete with all labor, material, and equipment necessary; along with maintaining and repairing/replacing these devices if determined necessary by the Engineer.

B. Payment: Payment under Item 4 will be made at a Lump Sum Price.

1.6 BASE BID CONTRACT ITEM 5 – SITE GRADING AND RESTORATION

A. Description: Work under this contract item includes all work for site restoration including all restoration of grading, soils, asphalt, concrete, pavement markings, and all other items necessary to restore the project sites to their original condition, including but not limited to removal of existing pavements of all types, granular backfill, stone, HMA, and concrete.

B. Payment: Payment under Item 5 will be made at a Lump Sum Price.

1.7 BASE BID CONTRACT ITEM 6 – DEWATERING AND TEMPORARY FLOW CONTROL (Bypass)

A. Description: Work under this contract item includes all material, labor, and equipment for all dewatering and temporary flow control (bypassing) as depicted in the Contract Documents.

B. Payment: Payment Under Item 6 will be made at a Lump Sum Price.

1.8 BASE BID CONTRACT ITEM 7 – WASTEWATER TREATMENT PLANT IMPROVEMENTS

A. Description: The work under this Contract Item incudes all labor, materials, equipment, supplies and services, and performing all Work for installation, maintenance, testing, and placing into the trouble-free operation the designed wastewater treatment plant improvements. These improvements include the electrical room building envelope, including but not limited to the foundations, slab, walls, truss system, roof, and connections to the existing WWTP building. Additionally these improvements include but are not limited to electrical improvements, drum screen, valve improvements, bypass pumping, waterline relocation, walkway improvements, fire rated wall additions and fire rated ceiling additions including structural roof improvements within the blower and UV room. The Work includes, but is not limited to, all general, architectural, structural, mechanical, plumbing, electrical and instrumentation and control work complete in place, together with all appurtenant Work as shown and specified in the Contract Documents.

B. Payment: Payment under Item 7 will be made at a Lump Sum Price.

1.9 MANDATORY ALTERNATE #1 – SCREW PRESS EQUIPMENT IMPROVEMENTS

A. Description: The work under this Contract Item incudes all labor, materials, equipment, supplies and services, and performing all Work for installation, maintenance, testing, and placing into the trouble-free operation the designed screw press and it's appurtenances. These improvements include but are not limited to the screw press, chemical storage tank, piping, pump station, emergency eye wash station, electrical/mechanical/instrumentation improvements, mobilization and demobilization, maintenance of traffic, construction engineering, erosion and sediment control, site grading and restoration, and dewatering and temporary flow control (bypass). The Work includes, but is not limited to, all general, architectural, structural, mechanical, plumbing, electrical and instrumentation and control work complete in place, together with all appurtenant Work as shown and specified in the Contract Documents.

B. Payment: Payment under this item will be made at a Lump Sum Price.

1.10 MANDATORY ALTERNATE #2 – SCREW PRESS BUILDING IMPROVEMENTS

A. Description: The work under this Contract Item incudes all labor, materials, equipment, supplies and services, and performing all Work for installation, maintenance, testing, and placing into the trouble-free operation the delegated designed screw press building improvements. These improvements include but are not limited to the building improvements (building envelope including but not limited to the foundations, slab, walls, truss system, roof, and connections to the existing WWTP building), ventilation, HVAC, lighting, doors, garage doors, electrical, fire rated wall additions, maintenance of traffic, construction engineering, erosion and sediment control, site grading and restoration, and dewatering and temporary flow control (bypass). The Work includes, but is not limited to, all general, architectural, structural, mechanical, plumbing, electrical and instrumentation and control work complete in place, together with all appurtenant Work as shown and specified in the Contract Documents.

B. Payment: Payment under this Item will be made at a Lump Sum Price.

1.11 MANDATORY ALTERNATE #3 – CEILING IMPROVEMENTS

A. Description: The work under this Contract Item incudes all labor, materials, equipment, supplies and services, and performing all Work for installation, maintenance, testing, and placing into the trouble-free operation the designed ceiling improvements within the existing WWTP. These improvements include but are not limited to the work involving ceiling improvements, related appurtenances and roof structural improvements (excluding the fire rated ceilings and walls within the proposed UV and blower room), maintenance of traffic, construction engineering, erosion and sediment control, site grading and restoration, and dewatering and temporary flow control (bypass). The Work includes, but is not limited to, all general, architectural, structural, mechanical, plumbing, electrical and instrumentation and control work complete in place, together with all appurtenant Work as shown and specified in the Contract Documents.

B. Payment: Payment under this item will be made at a Lump Sum Price.

1.12 MANDATORY ALTERNATE #4 – BANK LIFT STATION IMPROVEMENTS

A. Description: The Work under this Contract Item includes providing all labor, materials, equipment, supplies and services, and performing all Work for installation, maintenance, testing, and placing into the trouble-free operation of the designed lift station improvements. These improvements include but are not limited to, new pumps, wet well lining, piping, and valves and the installation of all electrical and instrumentation and controls improvements as shown and specified in the Contract Documents. Work under this item also includes maintenance of traffic, construction engineering, erosion and sediment control, site grading and restoration, and dewatering and temporary flow control (bypass).

B. Payment: Payment under this Item will be made at a Lump Sum Price.

1.13 MANDATORY ALTERNATE #5– CASE LIFT STATION DECOMMISIONING

A. Description: The Work under this Contract Item includes providing all labor, materials, equipment, supplies and services, and performing all Work for decommissioning of the existing lift station and capping/abandoning existing sanitary connections into the lift station. This work should include, but is not limited to capping all incoming piping, and filling in the existing wet well, valve vault and sanitary sewer structure. Work under this item also includes maintenance of traffic, construction engineering, erosion and sediment control, site grading and restoration, and dewatering and temporary flow control (bypass).

B. Payment: Payment under this Item will be made at a Lump Sum Price.

1.14 MANDATORY ALTERNATE #6 – EAGLE DRIVE LIFT STATION IMPROVEMENTS

A. Description: The Work under this Contract Item includes providing all labor, materials, equipment, supplies and services, and performing all Work for installation, maintenance, testing, and placing into the trouble-free operation of the designed lift station improvements. These improvements include but are not limited to, lining of the existing wet well, installation of hatches for both wet well and valve vault, installation of all electrical and instrumentation and controls improvements as shown and specified in the Contract Documents. Work under this item also includes maintenance of traffic, construction engineering, erosion and sediment control, site grading and restoration, and dewatering and temporary flow control (bypass).

B. Payment: Payment under this item will be made at a Lump Sum Price.

1.15 MANDATORY ALTERNATE #7 – SHORT STREET LIFT STATION IMPROVEMENTS

A. Description: The Work under this Contract Item includes providing all labor, materials, equipment, supplies and services, and performing all Work for installation, maintenance, testing, and placing into the trouble-free operation of the designed lift station improvements. These improvements include but are not limited to, new pumps, piping, and valves, site improvements, and the installation of all electrical and instrumentation and controls improvements as shown and specified in the Contract Documents. Work under this item also includes maintenance of traffic, construction engineering, erosion and sediment control, site grading and restoration, and dewatering and temporary flow control (bypass).

B. Payment: Payment under this item will be made at a Lump Sum Price.

1.16 MANDATORY ALTERNATE #8 – KELLY DRIVE LIFT STATION IMPROVEMENTS

A. Description: The Work under this Contract Item includes providing all labor, materials, equipment, supplies and services, and performing all Work for installation, maintenance, testing, and placing into the trouble-free operation of the designed lift station improvements. These improvements include but are not limited to, installation of all electrical and instrumentation and controls improvements, meter vault and all other appurtenances as shown and specified in the Contract Documents and placing into trouble-free operation. Work under this item also includes maintenance of traffic, construction engineering, erosion and sediment control, site grading and restoration, and dewatering and temporary flow control (bypass).

B. Payment: Payment under this item will be made at a Lump Sum Price.

1.17 MANDATORY ALTERNATE #9 –LOW PRESSURE SEWER IMPROVEMENTS

A. Description: The Work under this Contract Item includes providing all labor, materials, equipment, supplies and services, and performing all Work for installation, maintenance, testing, and placing into the trouble-free operation the designed grinder station improvements, flushing stations, and connection to existing sewer. This work also includes, but is not limited to providing all labor, materials, equipment, supplies and services, and performing all work for installation, maintenance, testing, and placing into the trouble-free operation the designed flushing station improvements and connection to existing sewer. Work under this item also includes maintenance of traffic, construction engineering, erosion and sediment control, site grading and restoration, and dewatering and temporary flow control (bypass).

B. Payment: Payment under this item will be made at a Lump Sum Price.

1.18 MANDATORY ALLOWANCE #1 – SPOT REPAIRS AND MOLD REMEDIATION

A. Description: The Work under this Contract Item includes providing all labor, materials, equipment, supplies and services, and performing all Work for installation, maintenance, testing, and placing into the trouble-free operation the roof improvements at the discretion of the Town associated with mold remediation and roof repairs (directed and coordinated at the Owners discretion). This work includes, but is not limited to, mold remediation, and spot repairs on all sheathing, trusses, and other parts of the roof as needed at the discretion of the Town.

B. Payment: Payment under this item will be made at a Lump Sum Price.

END OF SECTION 01 20 00

ATTACHMENT NO. 5

REVISED 40 05 20

SECTION 40 05 20 – VALVES

PART 1 GENERAL

1.1 SUMMARY

A. Section Includes: Requirements for furnishing and installing all valves and operators, except special regulating valves, telescopic valves, flap valves and valves specified in the Contract Documents.

1. Where valve operators are installed in NEC Class I, Group D, Division 1 or 2 hazardous locations (as specified), provide operator-related electrical equipment and appurtenances that are UL, Inc. approved for use in such areas.
2. Provide valve operators complete, including a suitable enclosure, with all appurtenances necessary for the operator to perform its intended function. Such appurtenances include, but are not limited to, anchor bolts and other mounting hardware, control switches, limit switches, pressure switches, torque switches, gauges, control valves, electrical supply connections, internal electric wiring and controls, terminal blocks, air supply piping, solenoid valves, miscellaneous valves, regulating controls, push button controls, miscellaneous controls, extension stems, local and remote indicators, operating nuts, purge water service with all associated piping, indicating lights, floor boxes, direct burial valve boxes and other such items.

B. Related Work Specified in Other Sections Includes, But is Not Limited to, the Following:

1. Section 05 05 15 - Galvanizing
2. Section 09 96 00 - High Performance Coatings
3. Section 26 05 00 – Common Work Results for Electrical
4. Section 26 05 19 - Wires and Cables
5. Section 40 05 18 - Miscellaneous Pipe and Fittings

1.2 REFERENCES

A. Codes and standards referred to in this Section are:

1. ASME B1.20.1 - Pipe Threads, General Purpose

2. ASME B1.20.7 - Hose Coupling Screw Treads

3. ASME B16.1 - Cast Iron Pipe Flanges and Flanged Fittings

4. ASTM A 27/A27M - Specification for Steel Castings, Carbon, for General Application

5. ASTM A 29/A29M - Specification for Steel Bars, Carbon and Alloy, Hot Wrought and Cold-Finished, General Requirements

6. ASTM A 48 - Specifications for Gray Cast Iron Castings

7. ASTM A 126 - Specification for Gray Iron Castings for Valves, Flanges, and Pipe Fittings

8. ASTM A 197 - Specification for Cupola Malleable Iron

9. ASTM A 276 - Specification for Stainless and Heat-Resisting Steel Bars and Shapes

10. ASTM A 278 - Specification for Gray Iron Castings for Pressure-Containing Parts for Temperatures Up to 650 F

11. ASTM A 395 - Specification for Ferritic Ductile Iron Pressure-Retaining Castings for Use at Elevated Temperatures

12. ASTM A 436 - Specification for Austenitic Gray Iron Castings

13. ASTM A 479/A479M - Specification for Stainless and Heat Resisting Steel Wire Bars, and Shapes for Use in Boilers and Other Pressure Vessels

14. ASTM A 536 - Specification for Ductile Iron Castings

15. ASTM A 564/A564M - Hot Rolled and Cold Finished Age Hardening Stainless and Heat Resisting Steel Bars and Shapes

16. ASTM A 572/A572M - Specification for High Strength Low Alloy Columbium Vanadium Steels of Structural Quality

17. ASTM A 743/A743M - Specifications for Castings, Iron-Chromium, Iron-Chromium - Nickel, and Nickel-Base Corrosion-Resistant for General Application

18. ASTM A 744/A744M - Specification for Castings, Iron-Chromium-Nickel, Corrosion-Resistant, for Severe Service

19. ASTM B 30 - Specification for Copper Base Alloys in Ingot Form

20. ASTM B 62 - Specification for Composition Bronze or Ounce Metal Castings

21. ASTM B 148 - Specification for Aluminum-Bronze Castings

22. ASTM B 584 - Specification for Copper Alloy Sand Castings for General Applications

23. AWWA C500 - Metal Seated Gate Valves for Water and Sewerage Systems

24. AWWA C502 - Dry-Barrel Fire Hydrants

25. AWWA C504 - Rubber-Seated Butterfly Valves

26. AWWA C508 - Swing Check Valves for Waterworks Service, 2 inch through 24 inch NPS

27. AWWA C509 - Resilient-Seated Gate Valves for Water Supply Service

28. AWWA C540 - Power-Actuating Devices for Valves and Sluice Gates

29. MSS SP-70 - Cast Iron Gate Valves, Flanged and Threaded Ends

30. MSS SP-71 - Cast Iron Swing Check Valves, Flanged and Threaded Ends

31. MSS SP-80 - Bronze, Globe, Angle and Check Valves

32. NACM - Welded and Weldless Chain Specifications

33. SAE J356 - Welded Flash Controlled Low-Carbon Steel Tubing Normalized for Bending, Double Flaring, and Beading

34. SAE J524 - Seamless Low-Carbon Steel Tubing Annealed for Bending and Flaring

35. SAE J525 - Welded and Cold-Drawn Low-Carbon Steel Tubing Annealed for Bending and Flaring

1.3 SUBMITTALS

A. General: Provide all submittals, including the following, as specified in Division 1.

B. Shop Drawings: Submit the following:

1. Complete detailed drawings of all valves

2. Working drawings, including arrangement and erection drawings of the operators and control equipment; schematic control diagrams, electrical connection diagrams, and complete description of the control system; and operating characteristics

3. Certified shop test report for the hydraulic power unit.

C. Quality Control Submittals: Submit the following:

1. If requested, manufacturer's certified performance and material records.

2. If requested, complete calculations for each size of motor operator indicating the force required to operate the valve, the operator force provided, full load and locked rotor current, and horsepower.

D. Operation and Maintenance: Submit operation and maintenance manuals for the valve operators.

1.4 QUALITY ASSURANCE

A. Furnish all valves of the same type from the same manufacturer. Provide parts that are interchangeable for all valves of the same type and size.

1.5 DELIVERY, STORAGE AND HANDLING

A. General: Deliver, store and handle all products as specified in Division 1 and as follows.

B. Historical Performance: Furnish and install eccentric plug valves of a type that has shown successful performance for a minimum of ten years. If requested, submit documentation of successful installations in which eccentric plug valves of the proposed type have been in operation for at least ten years.

C. Tests: Furnish a letter confirming that all plug valves have been satisfactorily tested as specified, prior to shipment.

D. Storage and Erection: Pack and store all valves in satisfactory operating condition. Carefully erect all valves in their respective positions, free from all distortion and strain.

1.6 SPARE PARTS

A. For electric motor operators:

1. One motor of each size
2. One torque switch of each size
3. One limit switch assembly of each size
4. Six push buttons
5. Six color caps of each color
6. Twenty indicating lamps
7. One reversing starter of each size

8. One overload relay of each size

PART 2 PRODUCT

2.1 MANUFACTURERS

A. Acceptable manufacturers are listed below. Other manufacturers of equivalent products may be submitted. Manufacturers must be Build America, Buy America Act compliant.

1. Gate Valves:

   a. American Flow Control
   b. M&H Valve Company
   c. Mueller Company
   d. NIBCO, Inc.
   e. Stockham
   f. United States Pipe and Foundry

2. AWWA Butterfly Valves:

   a. American Flow Control
   b. DeZurik
   c. Keystone
   d. Pratt

3. Eccentric Plug Valves:

   a. DeZurik

4. Lubricated Plug Valves:

   a. Crane (2 inches in diameter and smaller)
   b. DeZurik (2 inches in diameter and smaller)
   c. Homestead (2-1/2 inches in diameter and larger)
   d. Rockwell (2-1/2 inches in diameter and larger)
   e. Walworth (2-1/2 inches in diameter and larger)

5. Single Disc Swing Check Valves:

   a. American Flow Control
   b. Clow Valve Company
   c. M&H Valve Company
   d. Mueller Company

6. Double Disc Check Valve:

   a. Crane Stockham Valve Ltd.
   b. APCO

7. Solenoid:

   a. Automatic Switch Company
   b. Magnetrol

8. Globe and Angle Valves:

   a. NIBCO, Inc.
   b. Stockham

9. Electric Motor Operator - Nonmodulating:

   a. E-I-M Company
   b. Limitorque Corporation
   c. Rotork, Inc.
   d. Or-equal.

10. Electric Motor Operator - Modulating:

   a. E-I-M Company
   b. Limitorque Corporation
   c. Rotork, Inc.
   d. Or-equal.

2.2 MATERIALS

A. General:

1. Fabricate valves of materials resistant to corrosion for the required service.

2. Unless other materials are needed for corrosion resistance or are specified elsewhere, fabricate valves that are to be installed in metal pipelines and that are 2 inches in diameter and smaller of all brass or bronze, except fabricate the handwheel of ASTM A 197 malleable iron. Fabricate valves that are to be installed in metal pipelines and that are 2-1/2 inches in diameter and larger of the materials specified herein.

3. Fabricate gate, globe and angle valves with a minimum steam working pressure rating of 125 psig and a minimum nonshock cold water, oil or gas pressure rating of 200 psig, unless otherwise specified.

4. Fabricate operators of materials resistant to corrosion for the required services. Provide operator materials as specified.

5. Operator housings and pedestal handwheels:

a.	Cast iron	ASTM A 126, Class B ASTM A 48, Class 30 or 35
b.	Ductile iron	ASTM A 395 ASTM A 536, Grade 65-45-12
c.	Cast steel	ASTM A 27/A27M

6.	Operator worms, steel	ASTM A 29/A29M Grade Designation 8620
7.	Operator gears, steel (spur & helical)	ASTM A 572/A572M
8.	Worm gears, bronze	ASTM B 148, Alloy C95400 or C95500 ASTM B 584, Alloy C86300

B. Valve Joints

1. Fabricate valves 2 inches in diameter and smaller of the threaded or solder end type for valves to be installed in copper pipelines, and of the threaded end type for valves to be installed in metal pipelines.

2. Fabricate all valves 2-1/2 inches in diameter and larger, except bronze valves 2-1/2 and 3 inches in diameter, with flanged ends, unless otherwise specified.

3. Fabricate bronze valves 2-1/2 and 3 inches in diameter with solder or threaded type ends for valves installed in copper pipelines and threaded type ends for all other pipelines.

4. For metallic flanged joints, provide flanges that are faced accurately at right angles to the axis of the casting. Face and drill flanges and shop coat with a rust-preventive compound before shipment.

5. For flanged joints, provide flanges whose dimensions and drillings meet the requirements of ASME B16.1, 125 pounds as a minimum. For valves installed in pipelines with test pressure requirements higher than 125 psi, provide flanges whose pressure ratings equal or exceed the specified test pressure of the pipeline. Furnish special drillings where required. For valves having

flanges that do not conform with the thickness requirements of ASME B16.1, test each valve in accordance with the hydrostatic shell test pressure requirements of ASME B16.1.

C. Operating Force: Fabricate valves to limit the maximum force required to operate all manual valves, including but not limited to valves with wrench operated nuts, levers, handwheels and chainwheels, to 40 pounds. Limit the overall length of each wrench or single-arm lever to 18 inches. Limit the overall length of each dual-arm lever to 36 inches.

D. Handwheel: Mark each valve handwheel with an arrow and the word OPEN. Mark each nut with an arrow.

E. Manually Operated Valves: Equip all manually operated valves that have operating nuts, levers or handwheels and that are more than 7 feet above the floor with chain operated levers or chainwheels. Extend chains to 7 feet above the floor.

2.3 GATE VALVES

A. Materials: Unless otherwise shown or specified, furnish and install gate valves meeting the following requirements:

Nominal Valve Size, Inches	Standard	Type
3 and smaller	MSS SP-80	Solid wedge
4 thru 12, except for HVAC Service	AWWA C509	Resilient seat
16 and larger, except for HVAC Service	AWWA C500	Double disc

B. Rising Stems: Manufacture all gate valves with rising stems, unless otherwise shown or specified. Design all gate valves to open when the nut or handwheel is turned counterclockwise.

C. Nonrising Stem: For buried service, furnish nonrising stem gate valves. Equip nonrising stem valves, except for buried or submerged service, with externally visible indication of the disc position at all points of travel.

D. Stem Seals: Use the following types of stem seals:

Valve Type	Stem Seal
Nonrising stem	O-ring
Rising stem (Outside stem and yoke)	Stuffing box
Geared	
Nonrising stem	O-ring or stuffing box
Rising stem (Outside stem and yoke)	Stuffing box

E. Packing: Provide nonasbestos braided, twisted or formed ring type packing suitable for the pressure-temperature ratings of the valve.

F. Bonnet: Provide 3-inch and smaller gate valves with threaded bonnets. Provide 4-inch and larger gate valves with outside screw and yoke bonnets.

G. Accessories: Provide zinc plated bonnet bolts, studs and nuts. except for submerged service. Provide stainless bonnet bolts, studs and nuts for submerged service. Make wedging devices bronze to iron or bronze to bronze. Provide glands which are bronze or bronze bushed and bronze gland bolts and nuts.

2.4 BUTTERFLY VALVES

A. General:

1. Provide butterfly valves 4 inches and smaller of the full lug pattern with drilled and tapped bolt holes.

2. Provide butterfly valves 6 inches and larger of the full flanged pattern that meet the requirements of AWWA C504.

3. Provide butterfly valves of the rubber-seated, tight-closing type.

4. For fluid temperatures equal to or less than 180 degrees F, provide Buna-N seats. For fluid temperatures greater than 180 degrees F, provide EPDM or Viton seats. For fluid temperatures exceeding the temperature ratings of EPDM and Viton, provide seats that are appropriate for the intended service.

B. Materials:

1. For butterfly valves 4 inches and smaller, provide valve materials as specified below or as required for the service.

2. Valve bodies:
   a. Cast iron ASTM A 126, Class B

   b. Valve shafts:
      (1) Stainless steel - ASTM A 564, Type 630 (17-4PH stainless steel) ASTM A 276 Grade 316

   c. Valve discs:
      (1) Aluminum Bronze - ASTM B 148
      (2) Bronze -ASTM B 30

   d. Bearings: TFE coated stainless steel

3. For butterfly valves 6 inches and larger, provide valve materials as specified below or as required for the service:

   a. Valve bodies:
      (1) Cast iron ASTM A 126, Class B, ASTM A 48, Class 40

   b. Valve shafts:
      (1) ASTM A 276 or A 479/A479M, Type 304, stainless steel
      (2) carbon steel with A 276 or A 479, Type 304 stainless steel journals

   c. Valve discs:
      (1) Cast iron - ASTM A 48, Class 40
      (2) Alloy cast iron - ASTM A 436, Type 1
      (3) Ductile iron - ASTM A 536, Grade 65-45-12
      (4) Bronze - AWWA C504 Grade A, D or E

   d. Mating seat surface:
      (1) Stainless steel (castings) - ASTM A 743/A743M, A 744 Grade CF-8 or CF-8M
      (2) Stainless steel - ASTM A 276 or A479,Type 304
      (3) Alloy cast iron - ASTM A 436, Type 1

   e. Seats:
      (1) Buna-N (Wastewater)
      (2) New natural rubber or Buna-N (Water)
      (3) Neoprene (Air)

C. General AWWA C504 Construction: For butterfly valves 6 inches and larger, manufacture valves and all accessories, including operators, to meet the requirements of AWWA C504, except as otherwise specified. Provide valve bodies of the short-body flanged type or mechanical joint-end type, as shown or specified. Wafer body type valves without lugs are not acceptable.

D. Pressure: Provide butterfly valves of pressure classes that are not less than Class 25B, that exceed the pipeline test pressure in which the valve is installed, or that are as specified, whichever is greater.

E. Shafts: If stub shafts are furnished, extend the shafts a minimum of 1-1/2 diameters into the discs and provide clearance between the shaft and discs not exceeding the following:

Shaft Diameter (Inches)	Maximum Radial Clearance (Inches)
1/2 to 1-1/2	.002

2 to 4	.0025
5	.003
6	.004

F. Extended Necks: Provide butterfly valves in insulated lines with extended necks to clear insulation.

2.5 ECCENTRIC PLUG VALVES

A. General: Provide quarter turn valves having an eccentric action that causes the plug to rise off the seat contact during the opening movement rather than sliding from its seat.

B. Plugs: Provide plug valves with Neoprene or Buna-N faced plugs.

C. Materials: Construct plug valves of cast iron or semi-steel at least equal to ASTM A 126, Class B. For valve sizes 3-inch and larger, construct the body seats with a welded-in overlay, of not less than 90 percent pure nickel, on all surfaces contacting the plug face. For valve sizes under 3-inch provide uncoated or epoxy coated body seats. Make the overlay a minimum of 1/16-inch thick for valve sizes 20-inch and smaller and a minimum of 1/8-inch thick for valve sizes 24-inch and larger. Provide zinc plated bonnet bolts, studs and nuts.

D. Seat Adjustment: Make the water-tightness or gas-tightness of the valve seating adjustable. Provide a seating adjustment device that is external to the valve and that can be used without the need to remove the valve from the piping and with the valve under pressure.

E. Lubrication: Furnish plug valves with oil impregnated, permanently lubricated, Type 316 stainless steel bearings in the upper and lower journals.

F. Stem Seal: Provide a stem seal consisting of multiple, self-adjusting and replaceable chevron type packing rings and a packing gland or provide two replaceable, self-adjusting, U-cup seals. Make the stem seal adjustable and replaceable without removing the valve from the piping and without the need to disassemble the valve and operator. For buried or submerged service, provide a sealed enclosure to keep the stem seal clean.

G. Valve Port: Unless otherwise specified, construct the valve with a minimum port area of 80 percent of the full area of the pipe in which the valve is installed.

H. Multiport: Provide 3 and 4-way valve configuration when shown or specified.

I. Position Indicator: Equip plug valves, except for buried or submerged service, with external visible indication of the plug position.

J. Operators: Unless otherwise shown or specified, equip 6-inch and smaller valves with wrench or lever operators and 8-inch and larger valves with gear operators. Equip all valves in low pressure gas service with gear operators. Furnish one wrench for each size valve in each individual room or space in which valves are located. House gear operators for submerged or buried service in a watertight enclosure. For buried or submerged service, equip valve operators with stainless steel external bolting.

2.6 LUBRICATED PLUG VALVES

A. General: Design semisteel lubricated plug valves for operating pressures of not less than 125 pounds steam or 200 pounds water, oil, or gas. Provide port opening areas not less than 80 percent of the pipe area. Provide plugs that rotate 90 degrees from full open to full closed and that are equipped with stops. Design the valves so that excessive lubricant pressure cannot be built up and lubricant cannot be forced into the pipeline. Provide lubrication through Alemite fittings on the body of the valve.

B. Seals: Accomplish sealing at the operating end of the plug by means of a teflon gasket held in leakproof contact between the plug and body by means of a coil spring at the base of the plug or by means of resilient packing and a bolted gland or plastic packing applied under pressure. If resilient or plastic packing is used, provide for replacing the packing while the valve is under pressure.

C. Lubricants: Provide lubricants suitable for use with the fluid handled through the valve. Furnish not less than two pounds of lubricant for each valve after the initial lubrication has been made.

D. Operators: Equip 6-inch and smaller lubricated plug valves with wrench-operators and 8-inch and larger valves with gear-operators, unless otherwise shown or specified. Furnish one wrench for each size of valve in each individual room or space in which valves are located.

2.7 SINGLE DISC SWING CHECK VALVES

A. General: Provide single disc swing check valves designed to allow a full diameter passage and to operate with a minimum loss of pressure. Provide 1/8 through 3 inch check valves that meet the requirements of MSS SP-80. Except as specified herein, provide 4 inch through 24 inch check valves that meet the requirements of AWWA C508. For heating, ventilating or air conditioning service, provide 4 inch through 24 inch check valves that meet the requirements of MSS SP-71.

B. Design: Equip check valves with bronze renewable seat rings, bronze discs or disc rings and bronze disc hinge bushings and pins. Carefully mount discs and provide discs that swivel in disc hinges. Provide pins, discs and other parts that are noncorrosive, nonsticking and properly cured to operate satisfactorily within a

temperature range of 34 to 100 degrees Fahrenheit and with the fluids or gases specified.

C. Levers and Weights: Equip 6 inch and larger check valves with outside levers and weights.

2.8 DOUBLE DISC CHECK VALVE

A. General: Provide double disc check valves that are of the double plate and flat seat design with a center located, vertical hinge pin. Design the valves for tight shutoff under all reverse flow and head conditions.

B. Working Pressure: Design the valves for a minimum working pressure of 125 pounds per square inch. Provide end connections that are designed to fit between ASME B16.1 flanges.

C. Construction Materials: Construct the valve body and discs of cast iron. Provide Buna-N seal materials. Use stainless steel Type 316 springs.

2.9 SOLENOID VALVES

A. Provide solenoid valves of the direct acting, all electric, normally closed, packless type with full area ports, unless otherwise shown or specified. Design valves to not require a pressure assist from the process fluid to open or close. Size the solenoids in accordance with the pressure conditions in the pipeline in which valves are installed. Construct the valve body and bonnet of forged brass and construct the solenoid core of stainless steel. Design solenoid the coils for 115-volt, 60-hertz operation. Embed solenoid coils in molded plastic and install coils in NEMA Type 1 general purpose enclosures, except as shown or specified.

2.10 HOSE VALVES

A. General: Provide globe or angle type hose valves with rising stems, cap, chain and rubber composition discs for cold water pressures up to 200 psi, nonshock.

B. Construction: Manufacture hose valves of all bronze or brass, except the handwheels which may be malleable iron. Conform hose threads to ANSI B2.4.

2.11 GLOBE AND ANGLE VALVES

A. General: Provide globe and angle valves that meet the requirements of MSS SP-80.

B. Disc and Seats: Equip gate and globe valves with renewable bronze discs and renewable seats.

C. Bonnet: Equip globe and angle valves with threaded bonnets.

D. Packing: Provide nonasbestos braided, twisted or formed ring type packing suitable for the pressure-temperature ratings of the valve.

2.12 MANUAL BUTTERFLY VALVE OPERATORS

A. General: Provide operators as an integral part of the valve. Manufacture manual operators of the enclosed, hand-lever, traveling-nut or worm-gear type, as shown or specified.

B. Hand-Lever Type: Fabricate hand-lever type operators of cast-iron or steel construction with a nonmetallic, nonslip handgrip. Equip the lever with a locking device to secure the valve disc in the fully open or fully closed position, or at a minimum of 5 intermediate positions at 18 degree intervals. Provide mechanical stop-limiting devices to prevent overtravel of the disc in either direction. Permanently lubricate operators or provide operators with grease fittings.

C. Traveling-Nut Type: Fabricate traveling-nut type operators with a threaded steel screw and a bronze nut. Provide a slotted-lever or link-lever system to transfer the applied torque to the disc shaft. Equip all rotating shafts, screws and links with separate bearings. Provide thrust bearings.

D. Worm-Gear Type: Fabricate worm-gear type operators with a worm gear and matching drive worm. Provide bearings for each rotating member.

E. Stop-Limiting Devices: Provide stop-limiting devices on traveling-nut and worm-gear type operators to prevent overtravel of the disc in either direction. Design the operator to hold the disc in any position without flutter or wear on the valve or operator. House the operator in a watertight enclosure. Pack operators with grease or with oil. For buried or submerged service, equip valve operators with stainless steel external bolting.

F. Position Indicators: For buried or submerged service, equip manually operated butterfly valves, with externally visible indication of the disc position.

2.13 FLOOR AND BENCH STANDS

A. General: Provide floor and bench stands for valves smaller than 12 inches of the wheel operated type without gears. Provide stands for 12- to 20-inch valves of single crank, single speed operated. Provide stands for 24-inch and larger valves of single crank, single speed or 2-speed operated as specified.

B. Materials: Use materials in floor and bench stands meeting the applicable requirements of the "General" specifications subsection. Provide frames of cast iron or fabricated steel of heavy and substantial design with smooth exterior and neat appearance. Make adequate provision for lubrication and protect all operating parts.

C. Nameplate and OPEN Indication Marking: Equip each stand with a nameplate stating the valve controlled by the stand and also stamp the operator with an arrow and the word OPEN to indicate the direction of rotation.

D. Rising Stems: Fit rising stem floor and bench stands with ball or roller bearings designed to take the thrust. Equip rising stem stands with a transparent plastic cover to protect the stem. Provide the cover with labels and other attachments that will facilitate its use as an indicator of valve position.

E. Nonrising Stems: Fit nonrising stem floor and bench stands with thrust ball or roller bearings. Provide an indicator to show the position of the valve.

F. Operating and Lift Nuts: Provide operating nuts or lift nuts of bronze meeting the requirements of ASTM B 62, finished all over, suitably splined to connect with the handwheel or gear and with threads which will engage smoothly with those of the lifting shaft.

G. Crank-Operated Stands: Provide crank-operated stands with a crank that will open the valve when the crank is turned counterclockwise. Locate the center of the crank approximately 36 inches above the operating floor. Provide gears which are bevel or worm, of hardened steel or manganese bronze, with machine cut teeth and enclosed in a cast-iron body. Equip the crank with a brass or bronze sleeve-type handgrip rotating freely on the handle. Utilize a gear ratio that will enable the stand to operate the valve with a maximum force of 40 pounds on the crank at single or low speed.

H. Handwheel-Operated Stands: Provide handwheel-operated stands with handwheels that open the valve when the wheel is turned counterclockwise. Locate the center of the handwheel approximately 36 inches above the operating floor. Provide a handwheel of sufficient diameter so that the stand will operate the valve with a maximum pull on the handwheel of 40 pounds.

I. Manually Operated Bench Stands: Equip manually operated bench stands located more than 7 feet above the floor with chains and chainwheels that meet the requirements of the subsection headed "Chainwheel Operators".

2.14 ELECTRIC MOTOR OPERATORS – NONMODULATING & MODULATING

A. Refer to Section 40 05 57.

2.15 EXTENSION STEMS, VALVE BOXES AND FLOOR BOXES

A. Equip all direct burial valves and valves in vaults or manholes with operating nuts and extended shafts to grade, unless otherwise shown or specified. Equip all direct burial valves with adjustable type, cast-iron, valve boxes and extended shafts to grade.

Equip all valve boxes and floor boxes with ground level valve position indicators, unless otherwise shown or specified. Provide two tee wrenches for each size and type of operating nut.

2.16 SOURCE QUALITY CONTROL

A. Eccentric Plug Valve Leakage Test: Perform a plug leakage shop test on each eccentric plug valve with the plug in the closed position. Unless otherwise specified, perform the leakage test with a minimum pressure of 150 pounds per square inch (gauge) applied sequentially to both the upstream and downstream faces of the plug. Perform the test for a minimum duration of 15 seconds. Demonstrate that there is no leakage past the plug.

B. Eccentric Plug Valve Hydrostatic Test: Give each eccentric plug valve hydrostatic shop pressure tests with the plug open and with the plug closed. Perform the hydrostatic tests with a minimum pressure that is at least equal to the test pressure specified for the pipeline in which the valve is installed. Perform the test for a minimum duration of 30 seconds. Demonstrate with the hydrostatic tests that the valve is structurally sound and that there are no leaks through the external surfaces of the valve.

C. Hydraulic Power Unit Shop Test: Prior to shipping the fluid power unit, conduct a shop test that demonstrates that the unit fulfills the operating requirements of the Specifications.

PART 3 EXECUTION

3.1 INSTALLATION

A. General: Install valves in accordance with the manufacturer's recommendations and approved shop drawings and as specified in Division 1.

B. Eccentric Plug Valves: Unless otherwise shown or specified for eccentric plug valves installed in horizontal piping, orient the valve such that the shaft is in the horizontal position, the seat is in the downstream position and when the valve is in the open position the plug is up. Unless otherwise shown or specified, for eccentric plug valves installed in vertical piping, orient the valve with the plug up when the valve is in the closed position.

C. Floor and Bench Stands: Accurately center floor and bench stands over the valve. Solidly bolt stands to the floor or support structure, with through-bolts wherever possible. Place approximately 3/4 inch of nonshrink cement grout beneath stands mounted on concrete or similar construction to assure uniform support. For stands installed within the area of a removable type floor, platform, or grating, securely mount them on their own support structure independent of the removable element, unless otherwise shown or specified.

3.2 PAINTING AND COATING

A. General: Unless otherwise specified, coat the inside iron or steel surfaces of all valves and exterior surfaces of valves and operators that are to be buried in the ground or immersed in sewage or water with two coats of asphalt varnish. Paint exterior surfaces of other valves and operators as specified in Section 09 96 00.

3.3 FIELD QUALITY CONTROL

A. Manufacturer's Field Services: Furnish the services of a qualified representative of each of the various manufacturers to provide instruction on the proper installation of the equipment, inspect the completed installation, make any necessary adjustments, participate in the startup of the equipment, participate in the field testing of the equipment and place the equipment in trouble-free operation, as specified in Division 1.

B. Tests: After installation of the valves, control equipment and all appurtenances, subject the units to a field running test, as specified in Division 1, under actual operating conditions. Operate each valve through one complete open-close cycle under the maximum pressure differential practical.

3.4 OPERATION DEMONSTRATION

A. Manufacturer's Field Services: Furnish the services of a qualified representative of each of various manufacturers to demonstrate the proper operation and instruct plant personnel in the equipment's operation and maintenance, as specified in Division 1.

3.5 PAINTING

A. Paint the equipment in accordance with the requirements in Section 09 96 00.

END OF SECTION

(NO TEXT FOR THIS PAGE)

ATTACHMENT NO. 6

REVISED 40 05 57

SECTION 40 05 57 - ACTUATORS FOR PROCESS VALVES AND GATES

PART 1 - GENERAL

1.1 SUMMARY

A. Section Includes:
   1. Electric motor valve actuators.

B. Related Requirements:

   1. Section 01 -General Conditions (Submittals, Sequencing, Pre-work meeting, etc.)
   2. Section 26 – Electrical Requirements
   3. Section 40 – Process Control System Requirements

1.2 REFERENCE STANDARDS

A. American Bearing Manufacturers Association:

   1. ABMA 9 - Load Ratings and Fatigue Life for Ball Bearings.
   2. ABMA 11 - Load Ratings and Fatigue Life for Roller Bearings.

B. American Water Works Association:

   1. AWWA C500 - Metal-Seated Gate Valves for Water Supply Service.
   2. AWWA C541 - Hydraulic and Pneumatic Cylinder and Vane-Type Actuators for Valves and Slide Gates.
   3. AWWA C542 - Electric Motor Actuators for Valves and Slide Gates.

C. NFPA:

   1. NFPA 70 - National Electrical Code.

1.3 COORDINATION

A. Section 013000 - Administrative Requirements: Requirements for coordination.

B. Coordinate Work of this Section with installation of valves and accessories.

1.4 SUBMITTALS

A. Section 013300 - Submittal Procedures: Requirements for submittals.

B. Product Data: Submit manufacturer information for actuator with model number and size indicated.

C. Shop Drawings:

1. Indicate parts list, materials, sizes, position indicators, limit switches, actuator mounting, wiring diagrams, control system schematics, and on assembly drawings.
2. Submit actuator Shop Drawings with valve submittal.

D. Manufacturer's Certificate: Certify that products meet or exceed specified requirements.

E. Manufacturer Instructions: Submit special procedures and placement requirements.

F. Field Quality-Control Submittals: Indicate results of Contractor-furnished tests and inspections.

G. Qualifications Statements:

1. Submit manufacturer's approval of installer.

1.5 CLOSEOUT SUBMITTALS

A. Section 017000 - Execution and Closeout Requirements: Requirements for submittals.

B. Project Record Documents: Record actual locations and types of actuators.

1.6 QUALIFICATIONS

A. Manufacturer: Company specializing in manufacturing products specified in this Section with minimum three years' documented experience.

B. Installer: Company specializing in performing Work of this Section with minimum three years' documented experience and approved by manufacturer.

1.7 DELIVERY, STORAGE, AND HANDLING

A. Section 016000 - Product Requirements: Requirements for transporting, handling, storing, and protecting products.

B. Inspection: Accept materials on Site in manufacturer's original packaging and inspect for damage.

C. Store materials according to manufacturer instructions.

D. Protection:

1. Protect materials from moisture and dust by storing in clean, dry location remote from construction operations areas.

2. Furnish temporary end caps and closures on piping and fittings and maintain in place until installation.
3. Provide additional protection according to manufacturer instructions.

1.8 EXISTING CONDITIONS

A. Field Measurements:

1. Verify field measurements prior to fabrication.
2. Indicate field measurements on Shop Drawings.

1.9 WARRANTY

A. Section 017000 - Execution and Closeout Requirements: Requirements for warranties.

B. Furnish five-year manufacturer's warranty for actuators.

PART 2 - PRODUCTS

2.1 DESCRIPTION

A. Furnish gear and power actuators with position indicators.

B. Manufacturers:
1. AUMA Actuators, Inc.
2. Approved equal

2.2 ELECTRIC MOTOR ACTUATORS

A. Description:

1. Motor, reduction gearing, limit switches or positioning potentiometers.
2. Comply with AWWA C542.
3. The actuators shall be suitable for use on a 120-volt 1-phase 60 Hz power supply and must include motor, integral reversing starters, local controls and terminals for remote control and indication housed within a self contained, sealed enclosure. Set-up of the actuator shall be carried out without the removal of any covers. Actuator calibration shall be by integral pushbuttons and selector switch. No separate special commissioning tools shall be required. In addition, provision shall be made for the protection of configured actuator settings by means of a password.
4. The actuator shall be sized to guarantee valve closure at the specified torque and/or thrust requirement as indicated by the valve manufacturer or supplier. The actuator must be adequately sized to provide the torque required to operate the valve at 90% of the nominal voltage with the option of operation at up to -30% undervoltage conditions. One actuator size (same outside dimensions) shall be available covering output speeds

from 4.8 to 216 rpm for a given torque range, to avoid over sizing and unnecessary weight load on valve stem, flange and yoke. An increase of actuator size caused by higher actuator output speed is not acceptable. The operating speed shall provide valve closing and opening as indicated in the valve list for quarter turn valves. Quarter-turn valves shall be furnished with mechanical stops that restrict the valve/actuator travel.

5. Actuators shall be suitable for indoor and outdoor use. The actuator shall be capable of functioning in an ambient temperature ranging from -13°F to +158°F (-25°C to +70°C), up to 100% relative humidity.

B. Enclosure:

1. Actuators shall be 0-ring sealed, watertight to NEMA 4X/6 and submersible to IP 68-8 (26 feet (8meters) for 96 hours)) in accordance with EN 60529. During submersion it must be possible to operate the actuator at least 10 times. Enclosure must allow for temporary site storage without the need for electrical supply connection. All external fasteners shall be of stainless steel. Gear case shall be cast iron. In order to prevent condensation, a heater must be installed inside the actuator, suitable for continuous operation. Actuator must provide an alarm signal in case of failure of anti condensation heater. When required, actuators for hazardous locations shall be certified explosion proof for Class I, Division 2.
2. Mounting: Attached actuator housing using flanged motor adapter.

C. Motors:

1. The electric motor shall be Class F insulated, with a duty rating of at least 10 minutes at 104°F (40°C) ambient temperature at an average load of at least 35% of rated actuator torque. Motor shall be specifically designed and built by the actuator manufacturer for electric actuator service characterized by high starting torque, low stall torque and low inertia. Commercially available motors shall not be acceptable. Electrical disconnection of the motor shall be by means of a plug and socket and motor removal shall be possible without loss of lubricant. The actuator must include a device to ensure that the motor runs with the correct rotation for the required direction of valve travel regardless of the connection sequence of the power supply.
2. The following criteria shall be provided for motor protection:
   a. The motor shall be de-energized without damage in the event of a stall condition when attempting to move a jammed valve.
   b. The motor shall be de-energized in the event of an overtorque condition.
   c. Thermal devices (one for each phase of power) shall be imbedded in the motor windings to de-energize the motor in case of overheating.

D. Gearing

1. The actuator gearing shall be totally enclosed in a grease-filled cast iron gearcase suitable for operation in any orientation. Oil lubrication is not permitted. The gearcase shall contain sensors capable of continuously recording temperatures and vibration within the actuator. Actuator gearing shall be hardened steel with alloy bronze worm wheel. Where required per application, electric actuators will be provided with worm gearboxes. The

worm gearboxes shall be supplied with bronze or ductile iron worm wheels and end-of-travel mechanical stops.

E. Manual Operation
1. Manual operation shall be by handwheel which shall not rotate during motor operation. Return from manual to electric mode of operation will be automatic upon motor operation. A seized or inoperable motor shall not prevent manual operation.

F. Drive Nut and Thrust Base Assembly
1. For multi turn rising stem applications, the drive nut shall be installed in a detachable thrust base. The design shall allow actuator removal from the thrust base, leaving the thrust base attached to the valve to retain valve position. Thrust bearings shall be lubricated by means of an easily accessible grease fitting.

G. Valve Position and Torque Calibration
1. Position and torque shall be sensed by absolute encoder using hall effect sensors. Position and torque settings will be stored in permanent non-volatile memory.
Torque and travel adjustment parameters are to be as follows:
a. Position setting range 1 to 500 or 10 to 5,000 turns, with resolution of 2.81 degrees and accuracy to 5.0 degrees of actuator output.
b. Torque setting: 40% to 100% of rated torque.
2. Torque switch bypass to be provided for the torque sensing system to inhibit torque switch trip during unseating or during starting in mid travel against high inertia loads.

H. Electrical Characteristics:
1. Voltage: At contractor's option, provide actuator motors of sufficient torque that are coordinated with the Control System and either:

a. 120 V, single phase, 60 Hz.

I. Limit Switches:

1. Type: Heavy duty, open contact.
2. Actuation: Rotor cam.

J. Electric Actuator Control (contact closure / discrete signals or analog signals)
1. Actuator Status Indication
a. Six contacts shall be provided. The contacts shall have a minimum rating of 5A, 250VAC.
1) one contact dedicated for collective fault (phase failure, motor protection tripped, torque fault) or one of eight other fault groups
2) five additional indication contacts selectable from a list of at least 45 parameters including, but not limited to: end position CLOSED, end position OPEN, selector switch in REMOTE mode, torque fault in CLOSED direction, and torque fault in OPEN direction.
2. Local Indication
a. The actuator shall include a digital position indicator with a display from fully open to fully closed in 1% increments. Indicating lights will be included.
3. Remote Position and Torque Feedback

a. Actuator shall provide a 4 to 20 mA analog position feedback signal.
b. Actuator shall provide a 4 to 20 mA analog torque feedback signal corresponding to required valve torque for diagnostics and preventive maintenance

4. Integral Starter and Transformer
   a. The starter shall be suitable for up to 60 starts per hour for open/close service and up to 1500 starts per hour for direct mount actuators used in modulating service. The applicable number of starts per hour depends on actuator size and output speed.
   b. A removable plug and socket controls housing containing LCD operations and diagnostics display, blue tooth interface, reversing starters or thyristors, power supply/control transformer and local controls capable of:
      1) Being mounted integrally with the actuator and capable of being reoriented at 90° increments, so that push buttons and indication lights will face the operator.
         Controls wall mounted remotely up to 330 ft (100m). Cabling/wiring to be supplied by contractor using three separate conduits/cables per the following wire specifications:
         a) Power wiring utilizing 12 AWG conductors.
         b) Thermal/heater wiring utilizing 18 AWG conductors.
         c) Encoder wiring utilizing 20 AWG CAN-Bus conductors.
      2) Manufacturer provided wall mount assembly must include seal protection on both ends to ensure IP-68 protection against possible submergence.
5. Integral Local Controls and Control Mode Selector
   a. The actuator shall include local Open/Stop/Close/Reset pushbuttons and a Local/Off/Remote selector switch lockable in any of the three positions. The Reset pushbutton shall be provided to facilitate actuator commissioning. It shall be possible to select maintained or non-maintained control independently for either the local or remote modes. It shall be possible to program the output direction of the actuator (clockwise or counterclockwise to close) without removal of any covers. It shall be possible to re-orient local pushbutton controls in 90° increments.
6. Control Capabilities for Control By Contact Closure / Discrete Signals
   a. The following control capabilities must be available:
      1) Input remote control signals for:
         a) Open/stop/close (maintained contacts or emergency)
         b) Open/close ‘push to run’ (momentary)
         c) Programmable emergency input for fail to any intermediate or end of travel positions when required.
   b. Programmable electronic torque switch bypass initialized in end and intermediate positions. Settable from 0-5 seconds.
   c. Separate open and close direction pulse timer (stepping mode) circuits capable of initializing at any position (open, close or intermediate).
   d. It shall be possible to reverse valve travel without the necessity of stopping the actuator. The starter contactors shall be protected from excessive current surges during travel reversal by an automatic time delay on energization of the contactor coils.
   e. The internal circuits associated with the remote control and monitoring functions are to be designed to withstand simulated lightning impulses of up to 1.1 kV.
7. Communications

a. Communications shall be via Ethernet I/P gateway in the actuator.

8. Monitoring Facilities
   a. Facilities shall be provided for monitoring actuator operation and availability as follows:
      1) Liquid Crystal Display (LCD) – minimum four lines back-lit for setting menu showing status indication and diagnostic information.
      2) Monitoring capability via Bluetooth® connection.
      3) Retrievable (lifetime and re-settable) data logs including:
         a) Motor run time
         b) Total number of cycles
         c) Number of torque trips in each direction of travel
         d) Number of limit switch trips at each end of travel
         e) Total torque trip faults
         f) Motor thermal overloads.
      4) Diagnostic capability, which will store and enable download of historical actuator operation, torque data to permit analysis of actuator, valve in-service performance and status signals according to NAMUR recommendation NE 107 via local display. Data download shall be carried out without removing any covers and all shall be available locally at the actuator or accessible via laptop computer.
      5) Actuators installed in critical applications, shall be optionally equipped with a sensor package, consisting of torque, temperature and vibration diagnosis. In this case actuators shall also have a real time clock for event recording to support asset management functions and life cycle analysis.
9. Wiring and Terminals
   a. Internal wiring shall be tropical grade insulated stranded cable of appropriate size for the control and main power.
   b. All external wiring shall terminate in a removable plug and socket head, which allows easy disconnection of all power and control voltages. Actuators furnished without plug and socket terminal connections must have power and control disconnect switches for ease of maintenance and safety. A double seal shall be provided to prevent water ingress from the actuator terminal compartment to the actuator.

2.3 SOURCE QUALITY CONTROL

A. Section 014000 - Quality Requirements: Requirements for testing, inspection, and analysis.

B. Provide shop inspection and testing of completed assemblies.

C. Owner Witnessing:

1. Allow witnessing of factory inspections and test at manufacturer's test facility.
2. Notify Owner at least seven days before inspections and tests are scheduled.

D. Certificate of Compliance:

1. If manufacturer is approved by authorities having jurisdiction, submit certificate of compliance indicating Work performed at manufacturer's facility conforms to Contract Documents.
2. Specified shop tests are not required for Work performed by approved manufacturer.

PART 3 - EXECUTION

3.1 EXAMINATION

A. Section 017000 - Execution and Closeout Requirements: Requirements for installation examination.

B. Verify that field dimensions are as indicated on Shop Drawings.

3.2 INSTALLATION

A. Securely mount actuators using brackets or hardware specifically designed for attachment to valves.

B. Extend chain actuators to 5-1/2 feet above floor level. (not applicable)

C. Provide chain storage if location impedes pedestrian traffic. (not applicable)

D. Contractor to attach tagging system to appropriate actuators and return tagging system to Owner.

3.3 FIELD QUALITY CONTROL

A. After installation, inspect for proper supports and interferences prior to system commissioning.

B. Repair damaged coatings with material equal to original coating.

C. Commissioning
1. Each actuator will be provided with a commissioning kit consisting of a wiring diagram and installation and operation manual. No special commissioning tools or parts will be required for start-up. In order to prevent loss of screws during commissioning or maintenance, all covers shall be fixed with captive screws. In order to minimize the number of spare parts required, parts such as covers, plug and sockets, parts must be interchangeable throughout all model sizes

D. Performance Test Documentation
1. Each actuator shall be performance tested. Thes documentation can be provided if required indicating the following:
   a. Torque sensing tripping points in both the open and closed directions of travel.
   b. Current at the maximum torque tripping point

c. Actuator output speed
d. High voltage test

E. Non-intrusive Capability
1. In order to maintain the integrity of the enclosure, setting of all actuator parameters including the torque levels, position limits, configuration of the indication contacts and positioner functionality shall be accomplished without removing covers from the actuator control assemblies or housing. Settings shall be made by entering the set-up mode and following menu prompts appearing in the LCD window. The LCD window shall have four lines of data clearly indicating the set-up options. Set up shall be accomplished by using the actuator integral selector switch and pushbuttons - without the need for a hand-held setting device. Actuator parameters may also be set by means of laptop computer via a two-way information infrared interface or laptop or PDA via Bluetooth® interface. No special setting tools or devices will be accepted.

END OF SECTION

(NO TEXT THIS PAGE)

ATTACHMENT NO. 7

REVISED 46 71 46

SECTION 46 71 46 – THICKENING SCREW PRESS AND SHAFTLESS SCREW CONVEYOR

PART 1 GENERAL

1.1 WORK INCLUDED

A. There shall be furnished a dewatering system including dewatering screw press, flocculation tank, polymer makedown system, sludge feed pump and local control panel all integrally mounted, pre-piped and pre-wired to each other on an aluminum skid as specified in this Section and scheduled below. Equipment should also include a shaftless screw conveyor (loose and separate). All equipment shall be provided by a single manufacturer. The dewatering screw press skid shall be capable of processing municipal waste activated sludge.

1.2 REFERENCES

A. American Bearing Manufacturers Association (ABMA)

B. American Gear Manufacturers Association (AGMA)

C. American Society of Mechanical Engineers (ASME)

D. Institute of Electrical and Electronics Engineers, Inc. (IEEE)

E. American Welding Society (AWS) D1.1, Structural Welding Code.

F. National Electric Code (NEC).

G. National Electrical Manufacturers Association (NEMA).

H. American National Standards Institute (ANSI).

I. Conveyor Equipment Manufacturers Association (CEMA)

1.3 DEWATERING EQUIPMENT SKID DESCRIPTION

A. Manufacturer to design, engineer and fabricate one (1) dewatering screw press skid assembled with the following components Screw Press

1. Flocculation Tank
2. Sludge Feed Pump
3. Polymer Makedown System
4. Local Control Panel

5. Instrumentation

6. Aluminum Skid

7. Conveyor System - Shaftless Screw Conveyor (loose and separate)

B. All equipment mounted on the skid shall be pre-piped and pre-wired to each other.

1.4 SCREW PRESS DESCRIPTION

A. Screw press system shall be capable of municipal waste activated sludge described below.

B. This Conveyor System shall be capable of handling sludge and consist of screw conveyor, discharge chute, supports, and accessories for a complete functional system. The manufacturer shall furnish all components and accessories for the system including chutes to connect to the screw press, support systems, brackets, and components necessary for ease of operation and maintenance.

C. Dewatering screw press with components as specified in this Section and shown on the Drawings and as required for a complete and functional screw press system, including:

1. Screw press with all 304 stainless steel wetted parts.

2. Sludge inlet headbox.

3. Removable split drums.

4. Removable drum covers.

5. Three screen spray showers.

6. Speed reducer.

7. Galvanized carbon steel base.

8. Flanged filtrate outlet.

9. Back pressure cone.

10. Flocculation tank with mixer.

11. Equipment Motors.

12. Pressure transducer type level element with indicating transmitter and high level probe.

D. Design Requirements:

1. Screw Press Minimum Performance Requirements

Type of Sludge	Aerobic Digested Sludge
Feed Solids, % total solids (TS)	1.0 %
Discharge Solids, % TS	15 - 18 % with polymer addition
Design Inlet Capacity	15 gpm at 1.0% TS
Design Capacity	75 dry lbs per hour

2. Motor Characteristics – as described in this Section.

1.5 SUBMITTALS

A. Submit as specified in Division 01.

B. Product Data:

1. Submit data completely describing product including plan and section views and listings of materials of construction.

2. Submit surface preparation and finishes to be applied to all equipment.

C. The Conveyor System

1. Descriptive literature, bulletins, and catalog cuts of the equipment.

2. Materials of Construction.

3. Sequence of operation or functional narrative.

4. Complete wiring diagram.

5. Complete installation instructions with points of electrical and requirements clearly shown.

6. Assembly and Electrician's installation checklist (written by manufacturer) necessary to be completed by Contractor before manufacturer provides start-up services.

7. Motor Data.

8. Instrumentation and wiring diagram.

9. Shop drawings showing layout and necessary details of construction, including dimensions of major components; discharge chutes length, width and opening; size and location of connections to other work, access, material thickness, structural support members, sizes and locations, and locations of each equipment assembly.

10. Cross sectional details including dimensions and complete cross-referenced list of materials and part numbers.

11. Screw Conveyor

    a. Trough dimensions

    b. Screw diameters, flight diameter, width, thickness and pitch, rotating speed, material certificate and mill test report.

12. Weight of each major component along with total weight of equipment.

13. A list of manufacturer's recommended lubricants.

14. List of spare parts and special tools.

D. Shop Drawings:

1. Complete manufacturer fabrication/assembly drawings.

2. Certified drawings showing dimensions, weights, loading information and location of all components; Include details on interconnecting piping, supports, and control panel.

3. Wiring, control schematics, and control logic diagrams for all electrical and control components furnished.

4. Manufacturer's Drawings shall be coordinated with the Contract Drawings, including equipment numbers and piping designations.

5. List of Recommended Spare Parts with price information

E. Resume of Technician to perform screw press adjustments, inspections, observations of test operations, supervision of functional and performance testing, and training.

F. Operating and Maintenance Manuals: Include complete lubrication, maintenance, and operation instructions, including initial start-up instructions, and unloading and handling methods.

G. Operations and Maintenance Data (Conveyor System)

1. The contractor shall furnish no later than thirty (30) days prior to shipment of the equipment, one (1) complete set of operation and maintenance (O&M) manuals to the Owner.

2. Complete set of equipment arrangements and dimension drawings.

3. Installation instructions.

4. Preventative maintenance instructions detailing lubrication procedures and detailed maintenance instructions which describe procedures for adjustment, disassembly, and reassembly etc.

5. Complete parts list keyed to sectional drawings of the equipment.

6. Start-up checklist, maintenance inspection checklist, and performance data sheets.

H. Manufacturer's references

I. Quality Control Submittals:

1. Special shipping storage, protection, and handling instructions

2. Manufacturer's Installation Instructions

3. Factory Test Results

1.6 QUALITY ASSURANCE

A. Manufacturer Qualifications: Consideration will be given only to the equipment of Manufacturers who are regularly engaged in such work and thoroughly experienced in the design and manufacture of screw press equipment specifically manufactured for municipal, secondary treated, waste activated sludge.

B. Certifications: The dewatering equipment supplier must provide the "Certification of Compliance" (COC) letter with their priced equipment proposal to the general contractor(s) bidding the project. The general contractor must include the dewatering equipment supplier COC in their bid proposal submitted to the OWNER at bid closing.

1.7 DELIVERY, STORAGE, AND HANDLING

A. Contractor shall unload, store, and handle the equipment per the manufacturer's instructions.

1.8 WARRANTY

A. Warranty shall extend for 12 months after start-up or 18 months after delivery, whichever comes first.

B. Warranty shall include all parts, labor, and coatings for repairing or replacing equipment that fails during the warranty period. Defects occurring within the warranty period shall be repaired or replaced by the manufacturer at no cost to the OWNER.

C. Equipment manufactured by others but supplied by screw press Manufacturer will have the equipment warranty as supplied by the manufacturer which is typically 12 months from delivery of the equipment.

1.9 PROJECT CONDITIONS

A. Deliver the dewatering skid as completely assembled as practical to minimize field assembly. All equipment mounted on the dewatering skid shall be pre-piped and pre-wired to each other at the factory. Contractor shall be responsible for unloading and any necessary field assembly. Contractor shall contact manufacturer for screw press field assembly requirements during bid.

1.10 SEQUENCING AND SCHEDULING

A. Coordinate work with restrictions as specified.

1.11 INSTALLATION EQUIPMENT

A. Special Tools: Provide standard manufacturer supplied toolbox with all tools needed to assemble and disassemble the screw press.

PART 2 PRODUCTS

2.1 SCREW PRESS

A. MANUFACTURER

1. Manufacturer: FKC Co., LTD. or approved equal.

a. The screw press and all other components mounted on the dewatering skid shall be supplied by one manufacturer and delivered as a complete dewatering system.

2. Where a manufacturer's standard equipment name and/or model number is listed, the equipment system shall be provided as modified to conform to the performance, functions, features, and materials of construction as specified herein.

B. MATERIALS

1. Wetted Parts: Stainless Steel, Type 304, unless otherwise indicated.

2. Drive Unit: As scheduled.

3. Galvanized carbon steel base

4. Other parts: Coated carbon steel

5. Miscellaneous hardware, including bolts, nuts, washers, and fastener clips in the wetted area: Stainless steel.

C. HOUSING

1. Housing shall be rigid Type 304 stainless steel weldment, supported by structural carbon steel base and shall have removable Type 304 stainless steel covers for screen access.

2. Sludge feed connections and filtrate discharge connections shall respectively be Type 304 stainless steel pipe stub and flanged meeting ANSI/ASME B 16.1, Class 125, or ANSI/ASME B 16.5, Class 150; provide higher pressure class as required to meet Design Working Pressure.

3. Press shall have Type 304 stainless steel discharge box with hinged lid. Dimensions as indicated on the Drawings.

4. Housing shall be designed for noise reduction, to act as a protective guard and to provide a complete enclosure for odor containment.

5. The screw press shall be provided with Type 304 stainless steel spray covers on the top and sides of the screw press drums where necessary for sanitation and personnel protection. Side covers shall be easily removable by a single person.

6. Headbox shall include hinged top inspection door.

D. DRIVE SYSTEM

1. Drive system shall consist of an electric motor suitable to use with a variable speed drive system as required to provide full load capacity and also to withstand the full starting torque of the system. VFD shall be provided as part of the Dewatering Control Panel.

2. Screw speed shall be electronically controlled by means of a VFD in a NEMA 4X enclosure. Maximum screw speed shall be 0.6 rpm or lower.

3. Speed Reducer:

   a. Provide speed reducer rated for uniform shock load classification.

   b. Speed reducer shall be Sumitomo Cyclo Reducer or equal.

4. Shaft Seals shall be Musashi double lip spring-loaded Nitrite oil seal or equal.

E. BEARINGS

1. Screw press shall be designed so that the entire rotating assembly is supported on the discharge end by a grease lubricated ball or spherical roller type bearing. The bearing shall be conservatively designed to withstand all stresses of the service specified. Main bearings shall have a minimum B-10 life rating of 500,000 hours at standard operating speeds.

2. Bearings for the screw shall be anti-friction with grease lubrication.

F. Flexible connectors for the drive motor and screw press junction boxes shall be furnished by the installing Contractor such that all local electrical codes are met.

G. SCREW PRESS MOTOR

1. Provide inverter rated, severe duty motor, 1.15 SF, NEMA Premium Efficiency, cast iron frame with manufacturer's standard, corrosion resistant, epoxy finish.

2. Max screw press motor requirements of 2 HP, (208V/3 phase)

H. SCREW

1. Screw Shell: Stainless steel, Type 304.

2. Helical flight welded to screw shell: Stainless steel Type 304 flight.

a. Brushes, squeegees and other wear items attached to the screw flight are not acceptable.

b. Screw flight shall be machined for clearances to have no contact with the drums.

3. The screw shall be supported at the discharge by a radial bearing.

I. SCREENS

1. Type 304 stainless steel panels with punched holes.

2. Wedge wire screens are not acceptable.

3. Oscillating or moving rings are not acceptable.

J. SHOWER HEADERS

1. Type 304 stainless steel pipe, fittings and shower nozzles.

2. Shower headers shall be provided along the entire length of the drum set, beneath the headbox, and along the edge of the filtrate pan on the discharge end.

3. Operating pressure for all shower headers shall be 30 to 45 psi. Showers requiring higher pressures or booster pumps are not acceptable.

4. Shower headers shall be stationary and remain in a fixed position. Moving or rotational showers within the wetted, sludge dewatering area or underneath the press covers are not permitted.

K. DRUM ASSEMBLY

1. Drums shall be 0.5 to 1.0 meters in length and split into two, removable drum halves.

2. Inner diameter of drums shall be no less than 0.4 meters.

3. Drum configuration shall allow maintenance work in the screw press flight area without removal of the screw from the press.

L. BACK PRESSURE CONE

1. Pneumatic or motorized control of back pressure cone movement is not acceptable. Back pressure cone will be free of electrical and air connection requirements.

M. PRESS ASSEMBLY

1. Screw press assembly shall be such that clearances around the entire perimeter of the unit for maintenance work shall not exceed 36 inches.

N. SURFACE PREP & COATINGS

1. Surface preparation of carbon steel surfaces on the screw press and flocculation tank shall be in accordance with SSPC-SP6 standards and shall be coated as follows:

2. Prime Coat: 5 mils of Carboline 890

3. Top Coat: 2 mils of Carboline 890 (if outdoors & exposed to direct sunlight), 5 mils (if indoors or covered outdoors)

4. Motor and gearbox for the screw press shall be prepared and coated with the manufacturer's standard surface preparation, prime coat and top coat for corrosion resistance.

2.2 FLOCCULATION TANK

A. Flocculation tank wetted parts shall be constructed of 304 stainless steel throughout.

B. Flocculation tank shall be designed for a retention time of 2 to 5 minutes under the average design flow rate. The inlet of the tank shall be located at the bottom of the tank and conditioned sludge shall overflow from the discharge pipe located near the top of the tank. Provide discharge pipe stub with flexible rubber hose sleeve connection.

C. Flocculation tank shall be supplied complete with an agitator. The agitator gearbox shall be an SEW. Agitator speed shall be adjusted electronically via VFD in the control panel.

D. Flocculation tank, agitator, and agitator drive shall be designed to handle the entire flow capacity range of the screw press.

E. Motor for the drive shall be a minimum of 1.0 hp, 208 V / 3-phase unit. Motor shall have an aluminum cast frame. Motor efficiency will be 82% or greater.

F. Provide split flocculation tank cover with a hinged inspection port.

G. Motor and gearbox for the flocculation tank shall be prepared and coated with the manufacturer's standard surface preparation, prime coat and top coat for corrosion resistance.

H. Polymer mixing valves, other mixing energy apparatus or piping configurations that does not allow for full view and testing of flocculated material by the operator is not acceptable.

2.3 POLYMER MAKEDOWN SYSTEM

A. MANUFACTURER

1. Manufacturer: FKC, Velodyne, or equal.

B. DESGN CRITERIA

1. Polymer Type: Emulsion
2. Polymer Activity (percent active): 30 to 75
3. Solution Concentration Range: 0.1% to 1% based on neat polymer
4. Solution Concentration Design Point: 0.5% based on neat polymer

Neat Polymer Flow Range (GPH)	Dilution Water Range (GPH)
0.3 – 3.0	60 – 600

C. POLYMER ACTIVATION & BLENDING CHAMBER

1. These specifications are based on a multi-stage, multi-zone, Hydro-Mechanical polymer activation & blending technology. Alternate technologies will only be considered if proven to provide an equal level of performance, versatility, reliability and quality, otherwise the following technology will be provided without exception.

2. In order to provide control and versatility to optimize the performance of the wide range of polymers available and to optimize system reliability, a multi-stage Hydro-Mechanical polymer blending technology shall be provided with both a non-mechanical and mechanical mixing stage:

a. Non-Mechanical Stage: To optimize reliability, the device shall be capable of activating and blending polymer based on plant water pressure alone at 30 psid or greater. Polymer shall be injected directly into a water jet by means of an injection quill positioned such that the non-mechanical mixing energy is in no way diminished prior to polymer and water contact. The non-mechanical zone

shall be designed such that the velocity of the mixing energy producing water jet is maintained or increases as flow decreases.

b. Hydro-Mechanical mixing Stage: In order to provide optimal polymer performance under all operating conditions and to provide total control over mixing energy, in addition to the non-mechanical mixing stage the device shall be capable of producing its mixing energy independent of plant water pressure through a variable intensity, controllable stainless steel hydro-mechanical mixer. The mixing impeller shall be fully controllable and capable of inducing ultra high, non-damaging mixing energy at all flow rates. This shall be accomplished by controlling mixing intensity and preventing over exposure to, or damaging recirculation through the impeller. The polymer mixing impeller shall be designed to produce both axial and radial flow to optimize mixing effectiveness and to effectively inducing high, non-damaging mixing energy over the systems full flow range.

c. Mixers that rely solely on plant water pressure and or flow for mixing energy will not be acceptable. Mixers where performance is affected by flow rate and therefore retention time resulting in under or over exposure to mixing energy, or which rely on constant speed impellers or that rely on close tolerances for blending shall not be acceptable.

3. In order to prevent polymer build-up, the mixing chamber shall maintain high velocity in the entire chamber - at no time shall there be low velocity within any portion of the mixing chamber.

4. The mixing impeller shall be controlled by VFD motor controller and driven by a wash-down duty AC motor. The motor shall be mounted horizontally. Motors mounted under the mixing chamber where seal failure or leaks can damage the motor shall not be acceptable

5. The mixer drive shaft shall be sealed by a mechanical seal which shall have an integrally mounted and factory plumbed seal flush. A drain hole behind the seal shall be provided in the mixing chamber to drain the polymer solution in case of a seal failure. The seal shall be easily accessible for replacement. Systems without a seal flushing system shall not be considered. All bearings shall be external from the mixing chamber. Internal bearings shall not be acceptable.

6. Both mechanical and non-mechanical mixing zones shall be clear polycarbonate to view the mixing action and blending effectiveness. Acrylic chambers prone to becoming brittle over time and cracking, or opaque pipe shall not be acceptable to meet this requirement. The clear cover shall have a stainless steel reinforced gusseted flange with a stainless steel discharge connection in order to handle maximum operating pressures.

7. The mixing chamber shall have a maximum rated pressure of 100 psi. Provide a pressure relief on the mixing chamber factory set at 75 psi.

8. Provide a neat polymer check valve specifically designed to isolate neat polymer from dilution water.

D. DILUTION WATER ASSEMBLY

1. The dilution water flow rate shall be monitored by a rotameter flow meter having the range as specified under paragraph 1.02 above. Unions or flanges shall be provided on the flow meter to allow easy removal for cleaning.

2. The unit shall have an electric solenoid valve for on/off control of total dilution water flow.

3. A differential pressure type low water differential pressure alarm shall be provided. The switch shall be adjustable between 25 and 100 psid. Static working pressure, 500 psi. The pressure switch shall be as manufactured by Ashcroft.

4. Provide a 2-1/2" stainless steel liquid filled pressure gauge to monitor dilution water inlet pressure.

E. POLYMER METERING PUMP

1. The unit shall have one (1) neat polymer metering pump(s) integrally mounted on the systems skid. The metering pump(s) shall have a range as specified under paragraph 1.02 above. The pump shall be a positive displacement, progressive cavity type constructed of stainless steel and Viton. The shaft seal shall be mechanical seals, packing type shall not be used. A 208 VAC wash-down duty motor shall drive the pump. DC motor are not acceptable. A gear reducer shall be provided to produce a maximum pump shaft speed of not more than 545 RPM. The motor shall be controlled by an VFD located in the system control panel.

2. Provide a calibration column with two full port PVC ball valves having Viton o-rings. The column shall be calibrated for a one-minute draw-down at maximum pump rate and read in GPH and milliliters. The calibration column shall be rigidly mounted to the systems frame with a minimum of two heavy duty brackets. Mounting the calibration to the neat polymer inlet piping shall not be acceptable. Provide a breather plug in the top of the calibration column designed to allow adequate displacement of air during calibration while preventing water or other foreign material from entering the calibration column.

3. Provide a thermal type loss of polymer flow sensor. The flow sensor shall include a stainless-steel plumbing assembly with a stainless-steel full port ball valve for draining during cleaning.

F. SOLUTION DISCHARGE ASSEMBLY

1. Provide a 2-1/2" stainless steel liquid filled pressure gauge to monitor system discharge pressure.

G. CONTROLS

1. A control panel integral to the systems frame shall be provided. The enclosure shall be rated NEMA 4X and constructed of FRP. The control panel shall consist of all controllers, digital displays, potentiometers, switches, lights, relays, and other control devices required for a complete operable system. The control panel and all components shall be industrial duty. All skid mounted electrical components interconnected to the control panel shall terminate at numbered and labeled terminal blocks. The terminal blocks shall be sized for 14 ga. wire. Wires shall be neatly run through wire raceway and numbered with shrink tubing type labels. Adhesive labels shall not be used. The control panel shall be positioned such that there are no obstructions in front of the control panel per related NFPA requirements. Control.

2. Power: 120 VAC, 1Ph, 60/50 Hz.

3. Operator Interface – Discrete Selector Switch:

   a. System ON / OFF (reset) / Remote

   b. One-Turn Potentiometer – Mixer Speed

   c. Ten-Turn Potentiometer – Progressive Cavity Metering Pump Control

4. Status / Alarm Indicators:

   a. Main Power ON

   b. Display of Metering Pump Rate (diaphragm pump only: located on diaphragm metering pump face)

   c. Low Water Differential Pressure Alarm

   d. Low Polymer Flow Alarm

5. Inputs (signals by others):

   a. Remote Start / Stop (discrete dry contact)

   b. Pacing Signal Based on Process Flow (4-20mA)

6. Outputs:

   a. System Running (discrete dry contact)

   b. Remote Mode (discrete dry contact)

   c. Common Alarm (discrete dry contact)

H. POLYMER EQUIPMENT SKID

1. The system's frame shall be of rugged 304 stainless steel construction. No mild steel shall be used. All piping shall be rigidly supported.

2. Under no circumstance shall the pump suction exceed 5” from the bottom of the skid for progressive cavity pumps.

3. The overall system dimensions shall not exceed 36”W x 26”D X 60”H.

2.4 SLUDGE FEED PUMP

A. MANUFACTURER

1. Manufacturer: Seepex, Netzsch, or equal.

2. The screw press, all other components mounted on the dewatering skid, and the conveyor shall be supplied by one manufacturer and delivered as a complete dewatering system.

B. DESCRIPTION

1. Pump shall be heavy duty, positive displacement, progressing cavity type. The pump shall be cradle mounted to permit the suction port to be rotated to any angle perpendicular to the centerline of the pump. Suction and discharge connections shall be 125 pound flat faced ANSI cast iron flanged.

C. HOUSING

1. Suction and discharge housings are to have smooth flow characteristics and be manufactured from GG25 cast iron. The housings shall be drilled and tapped NPT connections that can be used for the installation of pressure gauges/switches or for a drain.

D. ROTOR & DRIVE TRAIN

1. The rotor shall be driven by means of a heavy duty drive train. The pump rotor shall be machined of AISI 4150 alloy steel, hardened to a Rockwell "C" value of 57 to 60 and covered with a heavy layer of hard chrome plate at least 0.010-in thick for abrasion resistance.

2. The rotor shall be joined to the drive shaft by a carbon steel connecting rod and oil-lubricated sealed pin type or crown gear type universal joints of chrome alloy tool steel of adequate design to transmit the required thrust and torque while allowing the rotor to move through is eccentric path. The joint seals shall be clamped at both outside and inside diameters and recessed within heavy walled steel tubing to prevent damage by rags or other objects.

3. To maximize universal joint and seal life, the connecting rod operating angle shall not exceed 1¼ degrees off center. The drive shaft shall be solid. If hollow drive shaft is used, then a fiber deflector shall be installed to prevent the solids from entering the hollow shaft.

E. STATOR

1. The rotor shall rotate relative to a one-piece, medium-high Buna "N" rubber stator of approximate 65(±5) Durometer hardness (Shore A) securely bonded to its steel tube housing. The stator shall be chamfered on the ends to increase the chamber filling efficiency. The stator shall have integral moulded gaskets to prevent the pumped material from contacting the bonding of the tube.

F. SHAFT SEAL

1. The stuffing box shall be equipped with a single acting mechanical seal as manufactured by Burgmann or equal. The Seal is to be of the rubber bellows design and be able to operate independently of the direction of rotation and. The mechanical seal is to be so situated in the suction housing to ensure the best possible flushing of the seal by the product. Additionally the mechanical seal housing is to have a flushing connection. The metal parts are to be stainless steel and the seal faces are to be silicon carbide.

G. DRIVE & BASEPLATE

1. The motors shall be horizontal, totally enclosed fan cooled and of the horsepower and speed as required by the specified conditions. The motor shall be c-faced to a gear reducer in an arrangement as shown on the drawings. The pump and motor shall be mounted in-line on a structural steel baseplate.

2. Provide inverter rated, severe duty motor, 1.15 SF, NEMA Premium Efficiency, cast iron frame with manufacturer’s standard, corrosion resistant, epoxy finish.

3. Minimum sludge feed pump motor requirements of 3 HP, (208V/3 phase).

H. SURFACE PREPARATION & COATINGS

1. All surfaces shall be prepared and shop painted with the manufacturer’s standard system.

I. ACCESSORIES

1. To prevent damage through dry running the pump stator is to be provided with thermal dry running protection, including the control module for installation in the local control panel of the dewatering skid.

2.5 LOCAL CONTROL PANEL

A. Screw press manufacturer shall provide the dewatering control panel, PLC and field instrumentation for the dewatering system, as described and shown on the Contract Documents.

B. The PLC will be programmed by the screw press manufacturer. PLC shall be Allen Bradley CompactLogix 1769-L24ER, or approved equal (BABA Compliant) Screw press manufacturer is responsible to direct all programming changes required to meet the system performance standards.

C. The HMI will be programmed by the screw press manufacturer. HMI shall be Maple Systems 9.7-inch, HMI5097DXL, or approved equal, color touchscreen or larger. Screw press manufacturer shall provide all programming and screens required for display, setpoints, alarms and parameter ranges.

D. The local control panel shall include a minimum of the following:

1. NEMA 4X Stainless Steel Enclosure.
2. Variable Frequency Drive, AB Powerflex 525, for the Screw Press Motor.
3. Variable Frequency Drive, AB Powerflex 525, for the Sludge Feed Pump.
4. Variable Frequency Drive, AB Powerflex 525, for the Flocculation Tank.
5. Variable Frequency Drive, AB Powerflex 525, for the Incline Conveyor.
6. 3% Impedance Line Reactor for each VFD.
7. 208V/120V Transformer for 120V/1ph & 24VDC power supply for Polymer Makedown System and Instrumentation listed in paragraph 2.6.
8. Surge Protector, 208VAC 3-Phase Delta; 47 to 63 Hz.
9. Surge Arrestor, Pluggable type, 150VAC/DC, Square D.
10. Ethernet Switch, 8-port.
11. Mushroom Head, Red, Process Stop Push Button.
12. NEMA 4X Air Conditioner, 200 BTU, Through-Mount, EIC Solutions.

E. The local control panel shall include customer connections and programming for the following:

1. Pump #1 Run Status (Screw Press Grinder Station)
2. Pump #1 Seal Fail (Screw Press Grinder Station)

3. Pump #1 Overtemp (Screw Press Grinder Station)

4. Pump #1 Overload (Screw Press Grinder Station)

5. Pump #2 Run Status (Screw Press Grinder Station)

6. Pump #2 Seal Fail (Screw Press Grinder Station)

7. Pump #2 Overtemp (Screw Press Grinder Station)

8. Pump #2 Overload (Screw Press Grinder Station)

9. Wet well high-level float (Screw Press Grinder Station)

10. Wet well low-level float (Screw Press Grinder Station)

11. Wet well level (Screw Press Grinder Station) (analog)

12. Digester #1 Level (analog)

    a. Pump off at low water level of 840.00 FT and alert to main SCADA controls.

13. Digester #2 Level (analog)

    a. Pump off at low water level of 840.00 FT and alert to main SCADA controls.

14. These will include ten (10) dry contact digital inputs and three (3) – 4-20mA signals.

2.6 INSTRUMENTATION

A. HEADBOX LEVEL TRANSMITTER

1. Screw press manufacturer shall provide a pressure sensing type level indicating transmitter as follows:

2. MANUFACTURER

    a. Manufacturer: IMF Efector PI2307 or approved equal

B. HI-LEVEL SWITCH

1. MANUFACTURER

    a. Manufacturer: Warrick or approved equal

2. MATERIAL

    a. 303 Stainless Steel electrodes, ¼” diameter.

b. Junction Box & Electrode Mounting Assembly: stainless steel.

3. STANDARD RELAY

a. 10 A resistive at up to 120 VAC, 8-pin socket to be installed in screw press local control panel.

C. SOLENOID VALVES

1. MANUFACTURER

a. Manufacturer: ASCO Red Hat or equal

2. DESCRIPTION

a. Slow Closing Solenoid Valves

b. Pilot operated, normally closed.

c. Brass Body, NMR disc, PTFE & MBR Seals, 305SS Core Tube, 430FSS Core & Plugnut, 302SS Springs, & copper shading coil.

d. 120V/1ph, 6.1 watts, Class F Coil Insulation.

e. 125 psi max differential pressure.

f. 150 deg. F maximum fluid temperature

D. Provide a Fiber to Ethernet managed switch for PLC Ethernet I/P network. Refer to Construction Drawings.

2.7 SKID

A. The skid shall be 16-feet long by 8-feet wide and shall be comprised of 5052 bright aluminum 3/16" tread plate fastened on structural 6061-T6 aluminum 6" channel.

1. Stainless steel is also an acceptable skid material option.

B. All other aluminum sheets, plates, bars, angles and structural shapes shall be grade 6061-T6 or 3003.

C. The entire skid shall be capable of being lifted, moved and set using the four lifting points.

D. All equipment integral to the skid shall be secured with stainless steel anchor bolts and nuts mounted through drilled holes in flat bar welded to the aluminum structure.

E. All electrical and power conduit shall be routed below the aluminum trade plate within the dimensions of the skid. Conduit shall be liquid-tight flexible nonmetallic type.

F. Piping between the sludge feed pump and flocculation tank shall be schedule 80 PVC. Piping from the polymer systems to the sludge feed line and/or flocculation tanks shall be flexible hose type.

G. An aluminum access ladder for view the top of the floc tank shall be included and mounted on the skid.

2.8 SHAFTLESS SCREW CONVEYOR

A. Manufacturer

1. Manufacturer: FKC Co., Ltd. or approved equal

B. Description

1. The shaftless screw conveyor is to be loose and separate from the skid. Contractor shall provide one (1) inclined screw conveyor. The inclined conveyor shall be of a shaftless design and be 6” nominal diameter.

2. The Conveyor System shall accept dewatered sludge cake from the screw press and through an inlet hopper and convey the dewatered sludge cake to the outlet.

3. The screw conveyor shall be fully assembled and tested prior to shipping. The screw conveyor shall be shipped fully assembled, no field screw welding allowed.

4. The conveyor operation shall not cause excessive noise or vibration under loading conditions. The conveyor, including drive units, shall be designed such that noise levels in normal operation will not exceed 80 dBA at 3 feet from the equipment.

5. PERFORMACE REQUIREMENTS

a. The screw conveyors shall be capable of continuous transport of dewatered sludge at the following operating conditions:

1) Sludge volumetric min. transport rate.: 10 cu. ft./hour at 30 RPM

2) The conveyor shall be sized to convey the sludge at less than 60 percent of the conveyor’s rated capacity or 30 percent through filling. The conveyor drive unit shall be designed for 100 percent of conveyor rated capacity

b. 6” Diameter and 20-feet in length

c. Maximum incline of 26 degrees.

d. Screw conveyor will be able to be used in a through-wall application.

e. The Conveyor System shall meet service at 50% of the conveyor’s trough filling capacity. Each conveyor drive unit and spiral shall be designed for 100% of the conveyor’s trough filling capacity, and the starting of the

conveyor based on a fully loaded condition. Design units for continuous operations.

6. MATERIALS

a. Steel plate & shapes: 304 SS

b. Spiral: Cold formed spring steel, minimum thickness of 0.75-inch x 2.5-inch wide, 8620, 220 min BHN

c. Wear Liners: ½ inch thick ultra-high molecular weight (UHMW) PE 48” maximum length.

d. Bolt, Nuts, Washers: 304 SS, nuts and bolts shall be coated with anti-seize compound.

e. Cover: 10-gauge 304 SS bolted with gaskets in 5-foot removable sections.

7. SPIRAL

a. The spiral for the shaftless conveyors shall be designed to convey material without a center shaft, and with the stability to prevent distortion and jumping in the trough. Shaftless sections shall be formed to diameter and pitch in one operation. Shaftless sections shall be made from 0.75” thick x 2.5” wide, 8620 bar. Cut plate or sectional flights shall not be used. Minimum flight hardness 220 BHN.

b. The spiral shall have double bevel full penetration welds at splice connections. The spiral shall be aligned to assure true alignment when assembled and shall be coupled to the end shaft by a welded connection.

c. The spiral shall be concentric to within 1/16 inch over its entire length and shall be capable of withstanding a torque of at least 3,500 ft. lbs. without failure.

8. TROUGH

a. The trough shall conform to the dimensional standards of CEMA 300 and enclosure classification IIE and shall be fabricated from minimum 10 GA 304 SS stainless steel sheet. The trough shall be U shaped, formed flange, and shall be equipped with one (1) filling and one (1) discharge chutes for transferring material from screw presses to the designated discharge point, as shown on the Drawings.

b. The trough shall be furnished complete with a replaceable wear liner manufactured of ultrahigh molecular weight polyethylene PE, 48” long max sections for easy removal. Trough shall have a 304 stainless steel side hold

down bolted in place to prevent the screw from lifting in trough and bending the screw.

9. INLET/OUTLET CHUTES

a. The inlet and outlet chutes shall be fabricated from minimum 12 GA 304 SS stainless steel sheet. The inlet chute shall be supplied with a flange and 304 SS hardware to match the screw press discharge flange. The outlet chute shall be supplied with a flange and 304 SS hardware to match the inlet chute.

10. SUPPORT FRAMES

a. The conveyors shall be furnished complete support frames necessary to carry all loading. Frame bracing may not extend any further than the extent of the frame legs. with galvanized carbon steel intermediate support legs suitable for anchoring to the concrete base as shown on the contract drawings. The supports shall be shop fabricated from galvanized structural steel shapes and plates, with welding conforming to the standards of the American Welding Society.

b. Bolts, nuts and washers for conveyor supports shall be 304 stainless steel. Bolts, nuts and washers in contact with sludge together with those connecting the inlet and outlet chutes shall be 304 stainless steel. Nuts and bolts shall be coated with anti-seize compound.

c. The supports shall be designed to avoid interference with other equipment, equipment supports, or walking access around the conveyor. The supports shall be designed to prevent excessive vibration of the conveyor unit under every loading conditions.

11. GEAR REDUCER

a. The gear reducer shall be direct-coupled to the conveyor drive shaft.

b. Gear reducers shall be commercially built, AGMA Class II, single or double reduction, helical gear units with high capacity roller bearings. Bearings shall be designed for the thrust loads from the spiral flights and shall have an AFBNA B 10 life of 100,000 hours. The reducers shall be standard air-cooled units with no auxiliary cooling required. Lubrication shall be by splash as a minimum.

c. The applied torque of the drive unit and gear reducer shall be adequate to start the spiral conveyor when fully loaded.

12. DRIVE SHAFTS CONVEYOR SYSTEM

a. The drive shafts shall be heat-treated alloy steel AISI 4150. The shaft shall be accurately ground and fitted with key seats, as required.

13. BEARINGS

    a. Bearings shall have a B-10 life rating of 100,000 hours and conform to AFBMA standards.

14. COVERS

    a. A protection cover fabricated of minimum 10-guage 304 stainless steel shall be provided for the exposed length of the conveyor, as shown on the Drawings. The cover shall be bolted. The cover shall be sectioned to allow removal in 5-foot (maximum) pieces and shall be attached with stainless steel fasteners.

15. MOTOR REQUIREMENTS

    a. The spiral conveyors shall be driven by an electric motor directly connected to a gear reducer. The gear reducer shall be shaft mounted with a trough end adapter. The drive system shall be designed for starting the conveyor full loaded. OSHA-approved drive guards shall be provided to protect against moving parts.

    b. The motors shall be squirrel-cage TEFC electric induction motor complying meeting NEMA MG 1 and other applicable NEMA, ANSI and CISD, IEEE standards. Motor shall be constructed with Class B or F insulated winding, cast iron frame and cast iron end bells, with minimum B 30,000 anti-friction bearings. The motor shall be rated at 5 HP, 208 volts, 3 phase, 60 Hertz, continuous duty at 40 degrees C ambient temperature with a 1.15 service factor. The connecting load shall not exceed the motor nameplate horsepower rating under design operating conditions.

    c. Motor shall be listed and labeled by a recognized electrical testing laboratory for the application.

16. FABRICATION AND TESTING

    a. The conveyors shall be fabricated and assembled and tested prior to shipment. The system shall be broken down as required and shipped as an assembled unit in maximum permissible sizes where possible. Fabrication shall include shop drilling and reaming of field-assembled connections and fabrication of support frames. Exposed surfaces shall have a smooth finish and sharp edges and corners shall be ground off and removed.

17. SPARE OR REPLACEMENT PARTS

    a. Furnish a set of special tools required for removing worn parts, carrying out routine maintenance, and for making machine adjustments. Special tools are defined as those tools, which because of their limited use of purpose-made

design are not normally readily available, but which are necessary for maintaining the equipment.

b. Furnish gauges, indicators and lubricating devices necessary for the proper operation o the equipment, whether or not such accessories are specified.

18. WARRANTY

a. The contractor shall submit manufacturer's warranties for equipment to be furnished in accordance with this section.

b. Warranty shall extend for 12 months after start-up or 18 months after delivery, whichever comes first.

c. Warranty shall include parts, labor, and coatings for repairing or replacing equipment that fails during the warranty period. Defects occurring within the warranty period shall be repaired or replaced by the manufacturer at no cost to the Owner.

PART 3 EXECUTION

3.1 INSTALLATION

A. Install products in accordance with manufacturer's instructions and approved submittals.

B. The Contractor shall provide all hardware and accessories required for installation.

C. Manufacturer's Field Services

1. Include the following:

a. Inspection and Functional/Operational Testing: One trip with 3 days service.

b. Performance Testing/Training: One trip with 2 days service.

2. Additional trips resulting from failed tests shall be the sole responsibility of the manufacturer.

3. The Conveyor System

a. The contractor shall install the conveyors as shown in the drawings and as recommended by the manufacturer. Install the screw conveyors in a workmanlike manner, taking possible precautions to ensure proper alignment of shafts, gears, and other parts of the equipment.

b. The Contractor shall make electrical and process connections to the system prior to the arrival of the manufacturer's representative.

c. The Conveyor System is a subsystem of the Solids Dewatering System. Contractor responsibilities include assembly of components, connections between components, power supply, interconnecting wiring, instrumentation and controls, supports and miscellaneous hardware not specifically stated herein to ensure the exceptional overall system performance with seamless transition from one component to the next.

3.2 EQUIPMENT STARTUP AND TESTING

A. Perform start-up and functional testing for entire dewatering system, with all units operating in AUTO mode. The Contractor shall complete all electrical/instrumentation and loop testing prior to functional performance testing

B. Provide Major Certificate of Proper Installation.

C. Operational Test:

1. Functional/operational tests may be performed in the same trip.

D. Guaranteed Performance Testing:

1. Include the minimum number of trips and duration of service as previously indicated.

2. Include demonstration that dewatering system meets minimum specified performance requirements of this specification.

3. Manufacturer’s representative shall supervise all performance testing and be solely responsible for operating the dewatering and ancillary equipment (e.g., sludge and polymer feed systems). The Owner shall furnish personnel to assist in operating the equipment and take samples. Manufacturer shall provide certified test reports.

4. After adjustments are made to achieve the operating requirements, the dewatering system will be operated at the design conditions to demonstrate consistent performance. Samples of feed, filtrate, and cake shall be collected by Engineer's appointed representative or Owner and evaluated by the Manufacturer. The test will be deemed successful if average test results meet or exceed those specified.

5. Sample testing and analysis costs shall be the responsibility of the Owner.

6. Polymer shall be as selected by the polymer representative and supplied by the Owner for testing.

7. Data collected during each test run used to complete guaranteed performance testing shall include, as a minimum:

a. Run number.

b. Date.

c. Time.

d. Feed sludge percent total solids, %TS

e. Sludge feed rate, gpm.

f. Polymer name.

g. Polymer percent active, %.

h. Polymer feed rate (neat), gph.

i. Screw press speed, rpm.

j. Amperage draw by the screw press drive.

k. Cake percent total solids, %TS.

8. Provide calculated values for the following:

a. Solids throughput, lbs TS/hr.

9. Solids concentrations will be determined using “Standard Methods.”

10. Guaranteed Performance Test Runs:

a. Test runs shall consist of two 24 hour steady state runs performed on two separate days, one week apart. Maintain the minimum design solids throughput throughout the test runs. Inlet sludge for test runs shall be 1.0% or greater.

b. All test data and values and previously described and required to demonstrate compliance shall be recorded at the start of each run and every hour thereafter. The averaged results for each sample shall meet or exceed the minimum and guaranteed performance standards.

c. The units shall be operated in AUTO mode at all times during the Guaranteed Performance test runs.

d. Should the installed equipment fail to meet the specified minimum performance requirements, the manufacturer shall within 30 days make all necessary changes to the equipment and/or operation at no cost to the Owner. The equipment shall be retested using the same procedure indicated above. If after the second test the equipment still does not meet the minimum performance requirements and/or guaranteed performance standards, damages will be assessed and equipment replaced.

e. The screw press dewatering system shall meet every item of the performance criteria as specified prior to acceptance of the Owner.

11. MANUFACTURER shall prepare and submit a written report documenting the test data listed above.

12. Provide a computer spreadsheet compatible with Microsoft Excel (latest version) with the test data listed above.

E. Witnessing: All field testing shall be witnessed by the Owner's representative or Engineer.

F. A representative of the screw press manufacturer shall be provided for the following:

1. To inspect the equipment and installation

2. To make any field adjustments to ensure proper equipment operation

3. To furnish affidavit stating that the dewatering system has been tested and is ready for installation as specified.

4. To inspect start-up

G. Manufacturer shall inspect system before initial start-up and certify that system has been correctly installed and prepared for start-up.

H. Training:

1. Provide operator training for at least 2 days on-site by factory trained representative. Operator training to include:

a. Operations and inspection training.

b. Safety instruction.

c. Preventative maintenance instruction.

d. Calibration and other pertinent services.

I. The Conveyor System

1. The conveyor manufacturer shall test general operation and perform the following inspections and tests on each conveyor before shipment from the factory:

a. A conveyor run test to verify correct rotation and mechanical integrity. The entire unit is checked for vibration.

b. A Full Load Motor Test (run dry for 5 minutes at full load) to verify electrical data measurements.

c. A final inspection of screw, trough, motor rating, and electrical connections for compliance with purchase order.

2. The conveyors shall be tested onsite under typical operating load conditions before final acceptance.

3. The Contractor shall include services of a qualified representative to perform a pre-operational checkout and start-up of the equipment. Startup shall include one (eight) 8-hour session.

4. The Contractor shall adjust the instruments and signals associated with the Conveyor System as required to affect the conveyor operation described in this specification.

5. Provide one session (session for 4 hours) of field training for the Owner’s operation staff in conjunction with or immediately following the performance testing.

6. Provide authorized representative from equipment manufacturers to instruct the Owner's personnel in the operation and maintenance and configuration of the equipment. Training shall be scheduled a minimum of 2 weeks in advance of the first session.

7. Proposed training materials shall be submitted for review, and comments shall be incorporated. Training materials shall remain with the trainees.

8. Provide ongoing technical support for Owner’s operation staff for the full warranty period, including additional field training if requested by the Owner due to operational issues.

END OF SECTION

(NO TEXT THIS PAGE)

ATTACHMENT NO. 8

UPDATED SHEET T100

SWEETSER WASTEWATER IMPROVEMENTS

SWEETSER, INDIANA 46987

PLANS PREPARED FOR:

TOWN OF SWEETSER
113 NORTH MAIN STREET
SWEETSER, IN 46987
TELEPHONE: (765) 384-5065
CONTACT PERSON: KYLE TAYLOR, TOWN COUNCIL PRESIDENT
EMAIL: kyletaylor@sweetser.in

PLANS PREPARED BY:

DCCM
8770 NORTH STREET, SUITE 110
FISHERS, INDIANA 46038
TELEPHONE: (317) 588-1785
CONTACT PERSON: RICARDO PAREDES
EMAIL: rparedes@dccm.com

OPERATING AUTHORITIES:

SANITARY SEWER
TOWN OF SWEETSER
113 N MAIN STREET
SWEETSER, IN 46987
TELEPHONE: (765) 384-5065
CONTACT: PATRICK KENDALL
EMAIL: patrickkendall@sweetser.in

GAS (DISTRIBUTION)
CENTERPOINT ENERGY
8399 ZIONSVILLE ROAD
INDIANAPOLIS, IN 46268
TELEPHONE: (765) 287-2112
CONTACT: THOMAS OCHOA
EMAIL: thomas.ochoa@centerpointenergy.com

COMMUNICATIONS
AT&T INDIANA
116 E TAYLOR STREET
KOKOMO, IN 46901
CONTACT: DAVID SMITH
EMAIL: ds8383@att.com

FIBER
AMERICAN ELECTRIC POWER TELECOM
4504 S. LINCOLN BLVD.
MARION, IN 46953
CONTACT: TIMOTHY HOVIOUS
EMAIL: thhovious@aep.com

ELECTRIC (DISTRIBUTION)
AMERICAN ELECTRIC POWER
5000 WHEELING AVENUE
MUNCIE, IN 47304
TELEPHONE: (765) 730-7439
CONTACT: TYLER HARMON
EMAIL: trharmon@aep.com

GAS (TRANSMISSION)
CENTERPOINT ENERGY
8399 ZIONSVILLE ROAD,
INDIANAPOLIS, IN 46268
TELEPHONE: (765) 287-2119
CONTACT: JON EASTHAM
EMAIL: publicproject@centerpointenergy.com

TELEPHONE
SWEETSER TELEPHONE COMPANY
210 N MAIN STREET
SWEETSER, IN 46987
TELEPHONE: (765) 384-4311

STORM SEWER
TOWN OF SWEETSER
113 N MAIN STREET
SWEETSER, IN 46987
TELEPHONE: (765) 384-5065
CONTACT: PATRICK KENDALL
EMAIL: patrickkendal@sweetser.in

ELECTRIC (TRANSMISSION)
AMERICAN ELECTRIC POWER
8500 SMITHS MILL ROAD
NEW ALBANY, OH 43054
TELEPHONE: (614) 933-2297
CONTACT: JOSHUA ADAMS
EMAIL: jdadams@aep.com

OIL TRANSMISSION
BUCKEYE PARTNERS, LP
6161 HAMILTON BLVD
ALLENTOWN, PA 18106
TELEPHONE: (260)403-6863
CONTACT: BRYAN NICODEMUS
EMAIL: encroachmentreviews@buckeye.com

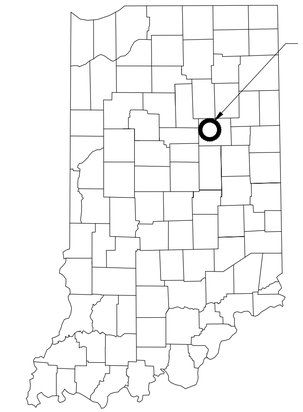

SITE VICINITY MAP
NOT TO SCALE

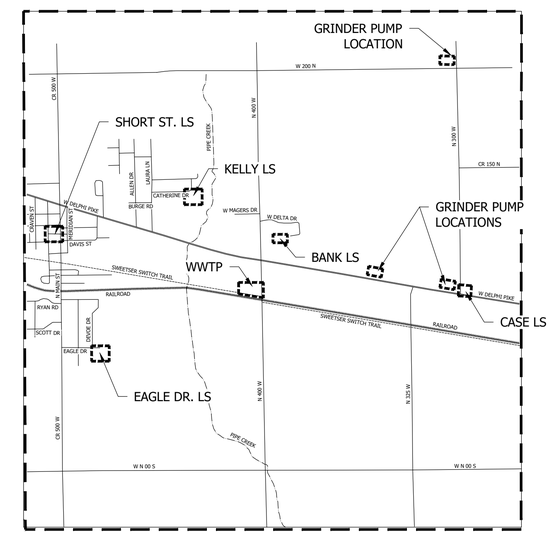

SITE LOCATION MAP
NOT TO SCALE

SHEET LIST TABLE	
SHEET NUMBER	SHEET TITLE
T001	TITLE SHEET
G100	GENERAL NOTES AND SHEET INDEX
D100	PROCESS FLOW DIAGRAM
C100	EXISTING WWTP - OVERALL SITE PLAN
C101	EXISTING WWTP - DEMOLITION PLAN
C102	EXISTING WWTP - OVERALL PROPOSED SITE IMPROVEMENTS PLAN
C103	PROPOSED GRADING AND SITE IMPROVEMENTS PLAN
C104	PROPOSED GRADING AND SITE IMPROVEMENTS PLAN
C104A	PROPOSED SITE PIPING PLAN
C105	WWTP - REFLECTIVE CEILING PLAN
C106	PROPOSED DRUM SCREEN DETAILS
C107	SECTION VIEWS
C108	KELLY LIFT STATION METER VAULT DETAILS AND SECTIONS
C200	PROPOSED GRINDER PUMP PROPERTY CONNECTIONS PLAN VIEWS
C201	PROPOSED LPS CONNECTION PLAN
C202	PROPOSED LPS FLUSHING STATION CONNECTIONS - OVERALL VIEW
C203	PROPOSED FLUSHING STATION CONNECTIONS - PLAN VIEWS
C300	PROPOSED SITE IMPROVEMENTS - EAGLE DRIVE LIFT STATION
C301	EAGLE DRIVE LIFT STATION PLAN AND SECTION VIEWS
C302	PROPOSED SITE IMPROVEMENTS - SHORT STREET LIFT STATION
C303	SHORT STREET LIFT STATION PLAN AND SECTION VIEWS
C304	PROPOSED SITE IMPROVEMENTS - KELLY LIFT STATION
C305	KELLY LIFT STATION PLAN AND SECTION VIEWS
C306	PROPOSED SITE IMPROVEMENTS - BANK LIFT STATION
C307	BANK LIFT STATION PLAN AND SECTION VIEWS
C308	PROPOSED SITE IMPROVEMENTS - CASE LIFT STATION
C309	CASE LIFT STATION PLAN AND SECTION VIEWS
C700	EROSION CONTROL - OVERALL SITE LAYOUT
C701	EROSION CONTROL - GRINDER PUMP CONNECTIONS
C702	EROSION CONTROL - FLUSHING STATION CONNECTIONS
C703	EROSION CONTROL - EAGLE DRIVE
C704	EROSION CONTROL - SHORT STREET
C705	EROSION CONTROL - KELLY LIFT STATION
C706	EROSION CONTROL - BANK LIFT STATION
C707	EROSION CONTROL - CASE LIFT STATION
C708 - C710	EROSION CONTROL DETAILS
C800 - C802	STANDARD CONSTRUCTION DETAILS

SHEET NUMBER	SHEET TITLE - ARCHITECTURAL
A100	PROPOSED SCREW PRESS BUILDING FLOOR PLAN
A101	PROPOSED SCREW PRESS BUILDING SECTIONS & ELEVATIONS
A200	PROPOSED ELECTRICAL ROOM FLOOR PLAN
A201	PROPOSED ELECTRICAL ROOM ELEVATIONS
A300	PROPOSED UV AND BLOWERS FLOOR PLAN
A301	PROPOSED UV AND BLOWERS ROOM SECTIONS AND DETAILS

SHEET NUMBER	SHEET TITLE - STRUCTURAL
S101	GENERAL STRUCTURAL NOTES
S201	FOUNDATION / SLAB-ON-GRADE PLAN
S202	WALKWAY PLAN
S301	FOUNDATION SECTIONS AND DETAILS
S302	WALKWAY SECTIONS AND DETAILS
S303	WALKWAY SECTIONS AND DETAILS
S401	TRUSS REPLACEMENT

SHEET NUMBER	SHEET TITLE - ELECTRICAL
E100	ELECTRICAL SYMBOLS AND ABBREVIATIONS
E101	ELECTRICAL SITE PLAN - BUILDING SITE
E102A	WWTP BUILDING ELECTRICAL LAYOUT - EXISTING
E102B	WWTP BUILDING ELECTRICAL LAYOUT - NEW
E102C	WWTP BUILDING ELECTRICAL LAYOUT - NEW LIGHTING
E102D	WWTP BUILDING ENLARGED RAS-WAS AND BLOWER AREA
E102E	WWTP BUILDING ENLARGED SCREW PRESS AREA
E103	WWTP ELECTRICAL ROOM LAYOUT
E104	WWTP ELECTRICAL ONE-LINE DIAGRAM - EXISTING
E105	WWTP ELECTRICAL ONE-LINE DIAGRAM - NEW
E106	WWTP ELECTRICAL SCHEDULES
E107A	WWTP ELECTRICAL CONDUIT-CABLE SCHEDULE
E107B	WWTP ELECTRICAL CONDUIT-CABLE SCHEDULE
E108	WWTP ELECTRICAL DETAILS
E109	SHORT STREET LS ELECTRICAL DETAILS
E110	KELLY DRIVE LS ELECTRICAL DETAILS
E111	CASE STREET LIFT STATION ELECTRICAL DETAILS
E112	BANK LS ELECTRICAL DETAILS
E113	EAGLE DRIVE LS ELECTRICAL DETAILS

SHEET NUMBER	SHEET TITLE - INSTRUMENTAL
I100	SCADA SYSTEM NETWORK LAYOUT DETAILS
I101A	SCADA SYSTEM PLC SIGNAL IO LIST
I101B	SCADA SYSTEM PLC SIGNAL IO LIST
I102A	SCADA SYSTEM PLC CONTROL PANEL LAYOUT DETAILS
I102B	SCADA SYSTEM PLC CONTROL PANEL WIRING DIAGRAM 1
I103	EXISTING CONTROL PANEL MODIFICATIONS
I104	ELECTRIC ACTUATOR CONTROL PANEL LAYOUT DETAILS
I105	KELLY DRIVE LIFT STATION CONTROL PANEL UPGRADES
I106A	BANK LIFT STATION CONTROL PANEL UPGRADES
I106B	BANK LIFT STATION VFD CONTROL PANEL
I107	CASE LIFT STATION CONTROL PANEL UPGRADES
I108	SHORT STREET LIFT STATION CONTROL PANEL UPGRADES
I109A	EAGLE DRIVE LIFT STATION CONTROL PANEL UPGRADES
I109B	EAGLE DRIVE LIFT STATION CONTROL PANEL WIRING DETAILS

SHEET NUMBER	SHEET TITLE - MECHANICAL
M100	WWTP BUILDING LAYOUT - MECHANICAL
M200	WWTP BUILDING LAYOUT MECHANICAL SCHEDULES AND DETAILS

Indiana 811 Know what's below. Call before you dig.
CALL 2 WORKING DAYS BEFORE YOU DIG
1-800-382-5544
CALL TOLL FREE
PER INDIANA STATE LAW IC8-1-26.
IT IS AGAINST THE LAW TO EXCAVATE WITHOUT NOTIFYING THE UNDERGROUND LOCATION SERVICE TWO (2) WORKING DAYS BEFORE COMMENCING WORK.

REVISIONS		
REVISION NUMBER	REVISION DESCRIPTION	DATE

FLOOD NOTE:
THE ACCURACY OF ANY FLOOD HAZARD DATA SHOWN ON THESE PLANS IS SUBJECT TO MAP SCALE UNCERTAINTY AND TO ANY OTHER UNCERTAINTY IN LOCATION OR ELEVATION ON THE REFERENCED FLOOD INSURANCE RATE MAP. THE WITHIN DESCRIBED TRACT OF LAND LIES WITHIN FLOOD HAZARD ZONE A AND ZONE X AS SAID TRACT PLOTS BY SCALE ON COMMUNITY PANEL NUMBER 18053C0109F DATED 10/30/2025 FOR THE FLOOD INSURANCE RATE MAPS FOR GRANT COUNTY, INDIANA (TOWN OF SWEETSER 180503 & GRANT COUNTY 180435).

DCCM

BID SET

SWEETSER WASTEWATER IMPROVEMENTS

SWEETSER, INDIANA, 46987

#	Revision	Date
1	ADDENDUM #1	09/14/26

Project #: 400-6314
Designed By: RJPA
Drawn By: RLH
Checked By: ALC
Date: 08/28/2026

RICARDO JUAN PAREDES ARBOSPINA
REGISTERED No. 11900824 STATE OF INDIANA
PROFESSIONAL ENGINEER

TITLE SHEET

T001

PRINT DATE: 9/11/26
PLOT SCALE: 1:186.91 EDIT DATE: 9/11/26 - 10:29 AM EDITED BY: RHUNT DRAWING FILE: P:\400-6314 SWEETSER WW IMPROVEMENTS\5 ACAD\PLAN SHEETS & WORKING DRAWINGS\400-6314 TITLE SHEET.DWG

ATTACHMENT NO. 9

UPDATED SHEET C104A

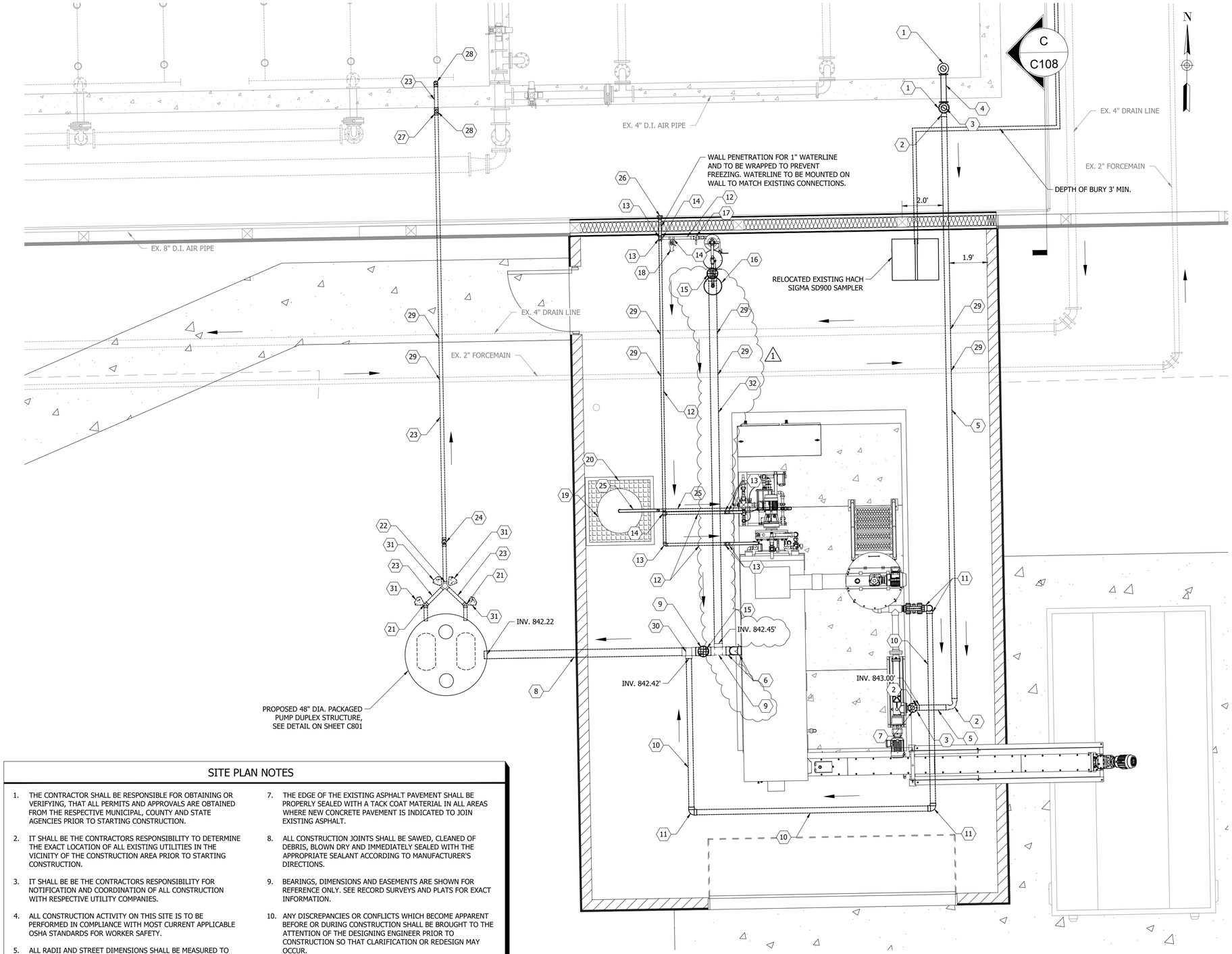

EXISTING WWTP - PROPOSED SITE PIPING PLAN

SCALE: 1" = 2'-6"

KEY NOTES

1. PROPOSED 3"X3" D.I. TEE, FLG X FLG, WITH CAP
2. PROPOSED 3" MECH D.I. 90° BEND
3. PROPOSED 3" D.I. PIPE, MECH X FLG
4. PROPOSED 3" D.I. PIPE, FLG X FLG
5. PROPOSED 3" D.I. PIPE, MECH X MECH
6. PROPOSED 4" SDR 26 PVC 90° BEND
7. PROPOSED 4" FLG D.I. 90° BEND
8. PROPOSED 4" SDR 26 PVC PIPE @ 2.00% SLOPE
9. PROPOSED 4"X4" SDR 26 PVC TEE
10. PROPOSED 3" SDR 26 PVC PIPE @ 2.00% SLOPE
11. PROPOSED 3" SDR 26 PVC 90° BEND
12. PROPOSED 1" PVC PIPE WATER LINE (HEAT TRACE WHERE ABOVE GROUND)
13. PROPOSED 1" PVC 90° BEND
14. PROPOSED 1"X1" PVC TEE
15. PROPOSED 10" FLOOR DRAIN
16. EYEWASH STATION
17. 1 1/4" BALL VALVE
18. WATER SPIGOT AND VALVE, 1" MAIN LINE TO BE REDUCED AT SPIGOT TO 1/2"
19. POLYMER-SNYDER 60 GALLON VERTICAL CHEMICAL STORAGE TANK OR APPROVED EQUAL
20. ULTRATECH SPILL PALLET 66 GALLON OR APPROVED EQUAL
21. PROPOSED 2" PVC 45° BEND
22. PROPOSED 2" PVC WYE FITTING
23. PROPOSED 2" SDR 26 PVC PIPE
24. PROPOSED 2" PVC CHECK VALVE WITH VALVE BOX AND RISER
25. 1" FLEXIBLE TUBING FROM POLYMER DRUM TO PUMP INLET, INSTALL INSIDE OF 1 1/4" PVC CONDUIT
26. PROPOSED 2"X2"X1" TEE
27. PROPOSED 2" PVC 90° BEND
28. PROPOSED 2"X2" PVC TEE, WITH CAP
29. CONTRACTOR TO VERIFY EXISTING UTILITY INVERTS BEFORE INSTALLATION OF PROPOSED WORK
30. PROPOSED 4"X4"X3" PVC TEE
31. PROPOSED CONCRETE THRUST BLOCK (1)
32. PROPOSED 4" SDR 26 PVC PIPE @ 3.00% SLOPE

SITE PLAN NOTES

1. THE CONTRACTOR SHALL BE RESPONSIBLE FOR OBTAINING OR VERIFYING, THAT ALL PERMITS AND APPROVALS ARE OBTAINED FROM THE RESPECTIVE MUNICIPAL, COUNTY AND STATE AGENCIES PRIOR TO STARTING CONSTRUCTION.
2. IT SHALL BE THE CONTRACTORS RESPONSIBILITY TO DETERMINE THE EXACT LOCATION OF ALL EXISTING UTILITIES IN THE VICINITY OF THE CONSTRUCTION AREA PRIOR TO STARTING CONSTRUCTION.
3. IT SHALL BE BE THE CONTRACTORS RESPONSIBILITY FOR NOTIFICATION AND COORDINATION OF ALL CONSTRUCTION WITH RESPECTIVE UTILITY COMPANIES.
4. ALL CONSTRUCTION ACTIVITY ON THIS SITE IS TO BE PERFORMED IN COMPLIANCE WITH MOST CURRENT APPLICABLE OSHA STANDARDS FOR WORKER SAFETY.
5. ALL RADII AND STREET DIMENSIONS SHALL BE MEASURED TO FACE OF CURB OR FACE OF INTEGRAL CURB AND WALK. ALL DIMENSIONS TO THE BUILDING ARE TO THE OUTSIDE OF BUILDING FOUNDATION WALL.
6. EXISTING PAVEMENT TO BE SAW CUT IN ALL AREAS WHERE INDICATED NEW PAVEMENT TO JOIN EXISTING PAVEMENT.
7. THE EDGE OF THE EXISTING ASPHALT PAVEMENT SHALL BE PROPERLY SEALED WITH A TACK COAT MATERIAL IN ALL AREAS WHERE NEW CONCRETE PAVEMENT IS INDICATED TO JOIN EXISTING ASPHALT.
8. ALL CONSTRUCTION JOINTS SHALL BE SAWED, CLEANED OF DEBRIS, BLOWN DRY AND IMMEDIATELY SEALED WITH THE APPROPRIATE SEALANT ACCORDING TO MANUFACTURER'S DIRECTIONS.
9. BEARINGS, DIMENSIONS AND EASEMENTS ARE SHOWN FOR REFERENCE ONLY. SEE RECORD SURVEYS AND PLATS FOR EXACT INFORMATION.
10. ANY DISCREPANCIES OR CONFLICTS WHICH BECOME APPARENT BEFORE OR DURING CONSTRUCTION SHALL BE BROUGHT TO THE ATTENTION OF THE DESIGNING ENGINEER PRIOR TO CONSTRUCTION SO THAT CLARIFICATION OR REDESIGN MAY OCCUR.
11. CONTACT ENGINEER IF ADDITIONAL DIMENSIONS ARE NEEDED FOR CONSTRUCTION.
12. ALL BELOW GRADE PRESSURIZED PIPING TO UTILIZE D.I.M.J. RESTRAINED JOINT FITTINGS.
13. ALL ABOVE GRADE PIPE PENETRATIONS BETWEEN EXISTING WWTP AND PROPOSED SCREW PRESS ROOM TO BE WITH SEALS AND TO A VAPOR/GAS-TIGHT BOUNDARY CONDITION.

DCCM

BID SET

SWEETSER WASTEWATER IMPROVEMENTS

SWEETSER, INDIANA, 46987

#	Revision	Date
1	ADDENDUM #1	09/14/26

Project #: 400-6314

Designed By: RJPA

Drawn By: RLH

Checked By: ALC

Date: 08/28/2026

RICARDO JUAN PAREDES ARONCHI REGISTERED No. 11900824 STATE OF INDIANA PROFESSIONAL ENGINEER

2.5' 0 2.5' 5'

GRAPHIC SCALE

PROPOSED SITE PIPING PLAN

C104A

PRINT DATE: 9/11/26
PLOT SCALE: 1:1 EDIT DATE: 9/11/26 - 11:26 AM EDITED BY: RHUNT DRAWING FILE: P:\400-6314 SWEETSER WW IMPROVEMENTS\5 ACAD\PLAN SHEETS & WORKING DRAWINGS\400-6314 WWTP PROPOSED SITE IMPROVEMENTS AND GRADING.DWG

ATTACHMENT NO. 10

UPDATED SHEETS S101 & S401

GENERAL STRUCTURAL NOTES

All notes hereafter are typically applicable unless noted otherwise on plans, sections, or details.

GENERAL

1. The structure has been designed for the in-service loads only. The methods, procedures, and sequences of construction are the responsibility of the Contractor. Supporting formwork for concrete construction shall not be removed before the concrete has gained sufficient strength to safely support the dead and superimposed loads which will be subsequently applied. The Contractor shall take all necessary precautions to maintain and ensure the integrity of the structure at all stages of construction.
2. All work shall be performed in accordance with the Indiana Building Code, 2014 Edition (2012 International Building Code, first printing, with Indiana Amendments).
3. Where new work is to be fitted to old work, the Contractor shall check all dimensions and conditions in the field, and report any errors or discrepancies to the Structural Engineer prior to the fabrication and erection of any new members.
4. Do not determine dimensions by "scaling" off the plans. The Contractor shall accept all risk associated with "scaling" and shall be responsible for all inadequate work resulting therefrom. Questions regarding missing or conflicting dimensions shall be directed, in writing, to the Structural Engineer.
5. All work shall be performed without damage to adjacent retained work. Adequate protection of areas nearby work against dust, dirt and debris accumulation shall be maintained at all times.
6. Principal openings in the structure are indicated on the structural drawings. Refer to the architectural, mechanical, electrical, and plumbing drawings for sleeves, curbs, inserts, etc. not herein indicated. Openings in slabs with a maximum side dimension or diameter of 10 inches or less shall not require additional framing or reinforcement, unless noted otherwise. The location of sleeves or openings not shown in structural members shall be approved by the Structural Engineer.
7. The Contractor shall relocate all mechanical piping, ducts, equipment, electrical conduits, wiring and plumbing that interfere with the proposed construction. Service shall be maintained to all equipment that is served by mechanical, electrical or plumbing conduit being relocated.
8. The Contractor shall relocate all utilities which interfere with the proposed construction. Service shall be maintained at all times during utility relocation unless otherwise noted.
9. The shoring and/or re-shoring design is the responsibility of the Contractor. Temporary shoring for slabs, beams, and girders shall be adequate to carry the total weight of the slab-beam-girder system and any temporary construction loads to be imposed on the structural system. Shoring for a level shall not be removed until the concrete at that level has attained the specified 28 day compressive strength (f'c). Removal of shoring and/or reshoring shall not cause overstress in any structural element.

FOUNDATIONS

1. Exterior footings shall bear 3'-0" minimum below finish grade and shall bear on undisturbed soil.
2. Foundation excavations shall be made to plan elevations. If any unexpected conditions are present, notify Engineer and Owner and retain Geotechnical engineer for evaluation. If the underlying soils are found to be unacceptable, one of the following procedures shall be followed:
   A. Remove the unacceptable soil and backfill with an engineered structural fill in accordance with the geotechnical engineering report or inspecting Geotechnical Engineer.
   B. Lower the footing to an acceptable soil. Contact the Structural Engineer for potential modifications to the foundation system.
3. Subgrade structural elements subjected to differential lateral soil pressure shall be adequately braced until the structural elements which provide lateral restraint have been placed and allowed to cure for a minimum of 7 days.
4. Excavations for spread footings, combined footings, continuous footings and/or mat foundations shall be cleaned and hand tamped to a uniform surface. Foundation excavations shall be adequately protected against detrimental change in condition from disturbance, rain, freezing, etc. Surface runoff shall not be allowed to enter the excavation.
5. Foundation conditions noted during construction that are unexpected shall be reported to the Structural Engineer and Geotechnical Engineer before further construction is attempted.
6. Center all column and wall footings under the column or wall above unless otherwise indicated.

CONCRETE

1. Reinforced concrete has been designed in accordance with the latest edition of the Building Code Requirements for Reinforced Concrete (ACI 318) by the American Concrete Institute (ACI).
2. Slabs-on-grade shall be constructed in accordance with the latest edition of the Guide for Concrete Floor and Slab Construction (ACI 302.1R).
3. Mixing, transporting, and placing of concrete shall conform to the latest edition of the Standard Practice for Selecting Proportions for Normal, Heavyweight, and Mass Concrete (ACI 211.1) and the Standard Specifications for Structural Concrete (ACI 301). Concrete curing shall conform to the latest editions of the Standard Practice for Concrete Curing (ACI 308) and the Standard Specification for Curing Concrete (ACI 308.1). In case of a discrepancy, the plans and specifications shall govern.
4. Unless noted otherwise, concrete shall have natural sand fine aggregate and normal weight coarse aggregates conforming to ASTM C33, and Type I or III Portland Cement conforming to ASTM C150.
5. Unless noted otherwise, fly ash may be used as a pozzolan to replace a portion of the Portland Cement in a concrete mix. Fly ash, when used, shall conform to ASTM C618, Type C. Concrete mixes using fly ash shall be proportioned to account for the properties of the specific fly ash used and to account for the specific properties of the fly ash concrete thus resulting. The ratio of the amount of the fly ash to the total amount of fly ash plus cement in the mix shall not exceed 20 percent.
6. Unless noted otherwise, ground granulated blast-furnace slag (GGBFS) may be used to replace a portion of the Portland Cement in a concrete mix. Ground granulated blast-furnace slag, when used, shall conform to ASTM C989, Grade 100 or 120. Concrete mixes using GGBFS shall be proportioned to account for the properties of the specific GGBFS used and to account for the specific properties of the GGBFS concrete thus resulting. The ratio of the amount of the GGBFS to the total amount of GGBFS plus cement in the mix shall not exceed 40 percent.
7. Water-reducing admixtures conforming to ASTM C494 may be used in the concrete mix design. Maximum slump shall be 5 inches for mixes containing water-reducing admixtures and 5 to 8 inches for mixes containing high range water-reducing admixtures.
8. Concrete compressive strength tests shall be performed in accordance with ASTM C39. The tests shall be performed by an independent testing company at the Owner's expense. Copies of the test results shall be forwarded to the Structural Engineer. One set of specimens shall be taken for each day's pour of appreciable size and for each 50 cubic yards in accordance with the latest edition of ASTM C31. Each set shall include one specimen tested at 7 days, 2 specimens tested at 28 days and one specimen retained in reserve. These test cylinders shall be laboratory cured.
9. When the ambient temperature is expected to fall below 40 degrees during the course of a concrete pour or subsequent curing period, it shall be placed and cured in accordance with the latest edition of Cold Weather Concreting (ACI 306R) and an additional set of concrete test cylinders shall be made. These cylinders shall be stored immediately adjacent to, and cured under the same conditions as the building concrete. Special curing boxes are not permitted for these test cylinders.
10. Concrete mixed, transported, placed, and cured under conditions of high ambient temperature, low humidity, solar radiation, or high winds shall conform to the latest edition of Hot Weather Concreting (ACI 305R) and an additional set of concrete test cylinders shall be made. These cylinders shall be stored immediately adjacent to, and cured under the same conditions as the building concrete. Special curing boxes are not permitted for these test cylinders.
11. Slump tests shall be made prior to and following the addition of plasticizers. Where concrete is placed by pumping methods, concrete for test cylinders and slump tests shall be taken at the point of final placement.
12. Water shall not be added to the concrete at the job site. The Contractor is responsible for coordinating a pumpable and workable mix without the addition of water at the job site. The use of plasticizers, retardants and other additives shall be at the option of the Contractor subject to the approval of the Structural Engineer. Follow the recommendations of the manufacturer for the proper use of additives. Use of calcium chloride or other chloride bearing salts is prohibited.
13. Place concrete in a manner so as to prevent segregation of the mix. Delay floating and trowelling operations until the concrete has lost surface water sheen or all free water. Do not sprinkle free cement on the slab surface. Finishing of slab surfaces shall conform to the latest editions of ACI 302.1R and ACI 304R (Guide for Measuring, Mixing, Transporting and Placing Concrete).
14. Where an epoxy adhesive is specified for bonding plastic concrete to hardened concrete, it shall conform to the latest edition of the Standard Specification for Bonding Plastic Concrete to Hardened Concrete with a Multi-Component Epoxy Adhesive (ACI 503.2).
15. Maintain concrete in a moist condition for at least 5 days at ambient temperatures above 70 degrees, and at least 7 days at ambient temperatures above 50 degrees. Curing compounds or moisture retention covers shall be used for all non-formed surfaces. Formed surfaces shall be cured by leaving forms in place. During hot, dry weather, keep forms moist by sprinkling. When forms are removed prior to the end of the curing period, apply curing compound to the exposed surfaces.
16. All interior slabs shall receive a hard "troweled finish". Exterior slabs, sidewalks, and stoops shall receive a "broom (or other type of slip resistant) finish". All formed surfaces not exposed to public view shall receive a "rough form finish", exposed surfaces shall receive a "smooth form finish" or patterned finish (using a form liner or other approved method) where specified. Concrete finishes shall be as defined in ACI 301.
17. The Contractor shall be responsible for any difficulties in concrete finishing that may arise due to the use of the fiber reinforced concrete
18. Protect finished concrete surfaces from damage, rain, hail, running water, other injurious effects.
19. Protect the concrete surface between finishing operations on hot, dry days or any time plastic shrinkage cracks could develop by using wet burlap, plastic membranes or fogging.
20. Construction joints at locations other than where indicated shall be submitted to the Structural Engineer for approval.
21. Construction joints shall be prepared by roughening the contact surface in an approved manner to a full amplitude of approximately 1/4 inch leaving the contact surface clean and free of laitance.
22. Contraction joints shall be made in concrete slabs-on-grade at major column centerlines, at points of discontinuity, at reentrant corners, and at other locations shown on the plans.
23. Provide 3/4-inch chamfers on all exposed corners of concrete except those abutting masonry.
24. The Contractor shall verify the location of sleeves, openings, embedded items, etc. and shall ensure that they are in place prior to the placement of the concrete.
25. Earth cuts shall not be used as forms ("bank forming") for vertical or sloping surfaces unless otherwise approved by the Structural Engineer. Where bank forming is permitted, the concrete element shall be increased at least 3 inches on all sides exposed to earth to account for possible soil contamination during concrete placement.

CONCRETE SCHEDULE

CLASS	f'_c	AIR CONTENT	MIN. CEMENT: LB/CY (SACKS/CY)	MAX. WATER/ CEMENT RATIO	CONCRETE PLACEMENT	REMARKS
A	3,000 psi	OPTIONAL	423 (4.5)	0.58	FOOTINGS, PILE CAPS, GRADE BEAMS, STEM WALLS, BASE SLABS BELOW FROST LINE	
B	4,000 psi	OPTIONAL	517 (5.5)	0.48	INTERIOR SLABS-ON-GRADE	SYNTHETIC FIBERS (1.5 LB/CY)

REINFORCING STEEL

1. Reinforcing bar detailing, fabricating, and placing shall conform to the latest edition of the following standards: Specifications for Structural Concrete for Buildings (ACI 301), ACI Detailing Manual (SP66). The latest editions of Concrete Reinforcing Steel Institute's Reinforcing Bar Detailing and Placing Reinforcing Bars may also be used.
2. Provide standard bar chairs, slab bolsters, spacers, etc. as required to maintain concrete protection specified. Reinforcing steel shall be tied to prevent displacement during concrete placement. Pulling up of welded wire fabric in slabs-on-grade and on metal deck is not permitted.
3. Reinforcement bars shall not be tack welded, welded, heated or cut unless otherwise indicated or approved by the Structural Engineer.
4. Welding of reinforcement bars, when approved by the Structural Engineer, shall conform to the latest edition of American Welding Society Standard D1.4. Electrodes for shop and field welding of reinforcement bars shall conform to ASTM A233, Class E90XX.
5. Synthetic fibers shall be used for temperature and shrinkage reinforcement in concrete slabs-on-ground. Synthetic fibers shall be virgin (non-recycled) nylon or polypropylene fibers conforming to ASTM C1116, Type III. Fibers shall be introduced into the mix at the plant in accordance with the manufacturer's recommendations. The Contractor shall submit the mix design, including the fiber size and quantity, to the Structural Engineer for approval prior to construction. The Contractor shall take adequate measures to manage any difficulty in concrete finishing associated with the use of the fibers.
6. Concrete cover over reinforcement, unless otherwise noted, shall be as specified in the latest edition of ACI 318.
7. Welded wire fabric in slabs on metal deck shall be placed anywhere from 3/4" to 1 1/4" down from the top of the slab unless otherwise noted.

CONCRETE REINFORCING STEEL LAP SPLICE SCHEDULE

BAR SIZE	TENSION SPLICE		COMPRESSION SPLICE
	TOP BAR	OTHER	
#3	21"	16"	12"
#4	28"	24"	15"
#5	35"	30"	19"
#6	42"	36"	23"
#7	49"	42"	26"
#8	56"	48"	30"
#9	63"	57"	34"
#10	76"	66"	38"
#11	93"	72"	42"

8. Unless noted otherwise, splicing of reinforcing bars shall conform to the latest edition of ACI 318.
9. Horizontal bars in walls, masonry bond beams, and continuous wall footings shall be bent at corners and intersections in such a way that continuity is provided through the joint. Separate corner bars of the same size and spacing as the horizontal reinforcing may be substituted for the bent portion of the continuous bars.
10. Unless noted otherwise, provide 2-#5 bars (one each face) around unframed openings and diagonally at reentrant corners of vertical height offsets in concrete walls. Place bars parallel to the sides of the opening and extend 24 inches beyond corners.
11. The Contractor shall prepare detailed working or shop drawings to enable him to fabricate, erect and construct all parts of the work in accordance with the drawings and specifications and shall submit one reproducible copy and one blue line copy to the Structural Engineer for review prior to fabrication. These shop drawings will be reviewed for design concepts only. The Contractor shall be responsible for all dimensions, accuracy, and fit of work.

STRUCTURAL STEEL

1. Structural steel detailing, fabrication and erection shall conform to the latest editions of the AISC Specification for Structural Steel Buildings, Allowable Stress Design and Plastic Design and the AISC Code of Standard Practice for Steel Buildings and Bridges.
2. Erector shall maintain minimum temporary bracing at each bay in each direction until the roof diaphragm and permanent lateral load resisting system construction are complete.
3. Structural steel shall be shop-painted with a rust inhibiting primer. Steel which will be exposed to weather shall be hot-dip galvanized (G90 finish). Steel that will be normally visible to the building's occupants or exposed to weather shall receive a field applied finish coat matching the existing surrounding surfaces. All abrasions caused by handling after shop painting shall be touched-up after erection is complete.
4. Design connections not shown in accordance with the latest AISC Specification and Manual of Steel Construction (allowable stress design method). Design simple span non-composite beam connections not shown to support one-half the beam load capacity as given in the AISC Uniform Load Constants for Beams Laterally Supported tables. Connection angles shall be double web angles, 5/16" minimum thickness.
5. Unless otherwise noted, bolted connections for structural steel members shall be bearing-type using 3/4" diameter ASTM A325 high strength bolts with standard 13/16" diameter holes tightened to the snug tight condition. Bolted wind brace connections shall be slip-critical-type (SC) using 3/4" diameter ASTM A325 high strength bolts with oversized 15/16" diameter holes tightened using the turn-of-nut method unless noted otherwise.
6. High strength bolted connections shall conform to the latest edition of the Specification for Structural Joints Using ASTM A325 or A490 Bolts, approved by the Research Council on Structural Connections of the Engineering Foundation. Faying surfaces of slip-critical-type (SC) connections shall be free of paint and meet the minimum requirements for a Class A surface condition (mean slip coefficient not less than 0.33).
7. Welding procedures shall conform to the latest edition of the American Welding Society's (AWS) Structural Welding Codes for: Steel ANSI/AWS D1.1 and Sheet Steel ANSI/AWS D1.3, and Reinforcing Steel ANSI/AWS D1.4.
8. Welded connections using ASTM A572 and A992 steel as a base metal shall be made with E70XX Low Hydrogen electrodes. Unless otherwise noted, other welded connections shall be made with regular E70XX electrodes. Welding shall be performed only where shown and to the extent indicated.
9. Field drilled holes shall be reamed, cleaned and deburred prior to assembly of the connection.
10. Thermal cutting shall preferably be done by machine. Hand thermally cut edges which will be subjected to substantial stress, or which are to have weld metal deposited on them, shall be reasonably free from notches or gouges. Notches or gouges greater than 3/16" that remain from cutting shall be removed by grinding. Re-entrant corners shall be shaped notch-free to a radius of at least 1/2".
11. Surfaces within 2" of any field weld shall be free of materials that would prevent proper welding or produce toxic fumes while welding is being done.
12. Splicing of structural steel members where not detailed is prohibited without the prior approval of the Structural Engineer as to location, type of splice and connection to be made.

POST-INSTALLED EXPANSION/ADHESIVE ANCHORS

1. Post-installed anchors shall only be used where specified on the Construction Documents. The Contractor shall obtain approval from the Structural Engineer prior to installing the post-installed anchors in place of missing or misplaced cast-in-placed anchors.
2. Care shall be taken in placing post-installed anchors to avoid conflicts with existing reinforcing steel.
3. Post-installed anchors shall be installed by qualified personnel in accordance with the Manufacturer's Printed Installation Instructions (MPII), the drawings and specifications. Installation of post-installed anchors shall be performed by personnel trained by manufacturers' representatives to install adhesive anchors. Contractor shall submit installer training cards with anchor package.
4. Post-installed anchors shall be HILTI type as manufactured by HILTI. Substitution requests for alternate products must be submitted by the Contractor to the Structural Engineer for review. Provide back-up technical data that demonstrates that the substituted product is capable of achieving the equivalent performance values (minimum) of the specified products using the appropriate design procedure and/or standard(s) as required by the building code.
5. The Contractor shall inspect the masonry or concrete surface at each proposed post-installed anchor location prior to installation. If the anchor locations align with mortar joints or the masonry or concrete is honeycombed, cracked or otherwise unsound, the anchors shall be repositioned so as to be located in sound material and be in accordance with the manufacturer's minimum spacing and edge distance requirements.
6. Anchors shall be subject to the following additional requirements:
   A. Anchors shall meet the requirements of ACI 355.2 (mechanical anchors) and ACI 355.4 (adhesive anchors).
   B. Anchors shall not be installed in concrete that has cured less than 28-days unless receiving prior approval from the Structural Engineer.
   C. Anchors shall not be installed until the concrete has reached a minimum compressive strength of 2,500 psi.
   D. Concrete temperature must be within the permitted range included in the MPII.
   E. Anchors shall be installed in holes drilled with the HILTI Hollow Drill Bit (TE-CD (SDS Plus) or TE-YD (SDS Max)) and HILTI VC 150/300 Vacuum. Follow the MPII for size and depth of holes required.
   F. Adhesive anchors installed in horizontal or upwardly inclined orientations to resist sustained tension loads shall be continuously inspected during installation by an inspector specially approved for that purpose by the building official. The special inspector shall furnish a report to the licensed design professional and building official that the work covered by the report has been performed and that the materials used and the installation procedures used conform to the approved contract documents and MPII.

REINFORCING STEEL EPOXY DOWEL SCHEDULE

BAR SIZE	#3	#4	#5	#6	#7	#8
STANDED EFFECTIVE EMBED, h_{ef}	3-3/8"	4-1/2"	5-5/8"	6-3/4"	7-7/8"	9"
MINIMUM EDGE DISTANCE, c_{min}	2"	2-1/2"	3-1/8"	3-3/4"	4-3/8"	5"

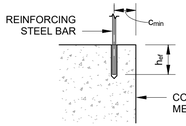

TYPICAL EPOXY DOWEL

NOTES:

1. EPOXY DOWELS SHALL UTILIZE HILTI HIT-HY 200 ADHESIVE SYSTEM OR APPROVED EQIVALENT
2. STANDARD EMBED DEPTH AND MIN EDGE DISTANCES PROVIDED IN THIS SCHEDULE APPLY AT ALL LOCATIONS UNLESS OTHERWISE NOTED ON SECTIONS AND DETAILS.

WOOD FRAMING

1. Structural lumber shall be detailed, fabricated and erected in accordance with the latest editions of the Timber Construction Manual by the American Institute of Timber Construction (AITC) and the National Design Specification for Wood Construction by the American Forest & Paper Association (ANSI/NFoPA NDS).
2. Bolts, lag screws, nails and other wood fastenings, unless otherwise noted, shall conform to the latest edition of the National Design Specification for Wood Construction. Standard cut washers shall be used between the wood and bolt head and the wood and nut.
3. All nails are common nails unless noted otherwise. All nails shall be carefully driven and not overdriven. Submit all proposed fasteners for approval prior to construction. Installation of all fasteners shall meet the requirements of NDS and ISANTA guidelines, including those in ESR 1539, and Section 2303.6 of the IBC.
4. All exposed framing and wood members in contact with concrete or masonry shall be pressure preservative treated wood (PPT) as described in the Specifications. All PPT wood to be kiln dried after treatment (KDAT). Hardware used with PPT wood to be hot-dip galvanized or stainless steel.
5. Rough sawn timbers shall be treated and finished where specified. Ends exposed to weather shall be treated with CCA.
6. Connections not specifically detailed herein shall be per Table 2304.9.1 of the 2012 International Building Code.
7. Truss load carrying capacities, repair design and details were based on an assumed structural lumber species and grade of Southern Pine, No. 2.
8. Coordinate final floor and roof framing including joist or truss layout & truss member configuration with Mechanical, Electrical, & Plumbing (MEP) drawings. Obtain additional MEP information as needed for complete coordination. Keep all mechanical chases free of framing. Do not locate joists or trusses at parallel plumbing walls.

DESIGN

Building Code:
Indiana Building Code, 2014 Edition (2012 International Building Code, first printing, with Indiana Amendments)

Soil information:
Allowable net bearing pressure:
Spread footings — 1,500 psf (assumed)
Continuous wall footings — 1,500 psf (assumed)

Concrete:
28 day compressive strength (f'c) — see schedule

Reinforcing steel (deformed bars of new billet steel):
Stirrup and tie — ASTM A615, Grade 60
Weldable (Low-Alloy) — ASTM A706, Grade 60
Otherwise — ASTM A615, Grade 60
Welded wire fabric (smooth) — ASTM A185
Welded wire fabric (deformed) — ASTM A497

Structural Steel:
Structural tubing members — ASTM A500, Grade B, Fy = 46 ksi
Structural steel pipe members — ASTM A53, Type E or S, Grade B, Fy = 35 ksi
Structural steel rolled wide flange W shapes — ASTM A992, Fy = 50ksi
(as an alternate, — ASTM A572, Grade 50 may be used)
Structural steel rolled S, M, and HP shapes & channels — ASTM A36
Structural steel rolled plates & angles — ASTM A36
All other members — ASTM A36
Connection bolts — ASTM A325N
Anchor bolts — ASTM A36
Stainless steel members — ASTM A493, Fy = 60 ksi

Structural Lumber (surfaced dry, used at 19% moisture content):
Decking — Southern Pine, No. 2
Bolts/Lag Screws — ANSI/ASME B18.2
Nails — FF-N-105B

Plywood/Performance Rated Panels:
Roof:
Span Rating — 32/16
Thickness — 1/2"
Exposure — 1
IBC Grade — 2-M-W

Non-shrink grout:
28 day compressive strength — 8,000 psi

Live loads:
Roof: — 20 psf

Wind loads:
Basic wind speed [(3-second gust)] — 115 mph
Importance factor, I_W — 1.0
Exposure — B

Seismic loads:
Seismic zone — 1.0
Importance factor — 1.0
Mapped MCE Seismic Spectral Response Acceleration at Short Periods, Ss — 18.0% g
Mapped MCE Seismic Spectral Response Acceleration at 1 Second, S — 8.1% g
Site Class — D (assumed)
Seismic Design Category — B

DCCM
CE Solutions structural engineers

SWEETSER WASTEWATER IMPROVEMENTS

SWEETSER, INDIANA, 46987

#	Revision	Date
1	ADDENDUM #1	9/14/26

Project #: 25-197
Designed By: JRS
Drawn By: JRS
Checked By: LKL
Date: 08/28/2026

09/14/2026
LAUREN LAI REGISTERED No. PE11700794 STATE OF INDIANA PROFESSIONAL ENGINEER

GENERAL STRUCTURAL NOTES

S101

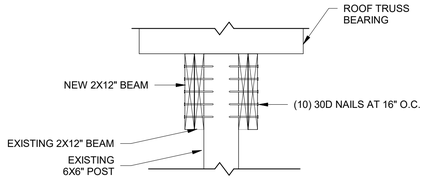

2 S401 HEADER REPAIR
1" = 1'-0"

NOTE: ALL TRUSSES UNDER PROPOSED NEW FRP CEILING SYSTEM TO BE STRENGTHENED ACROSS ROOF.

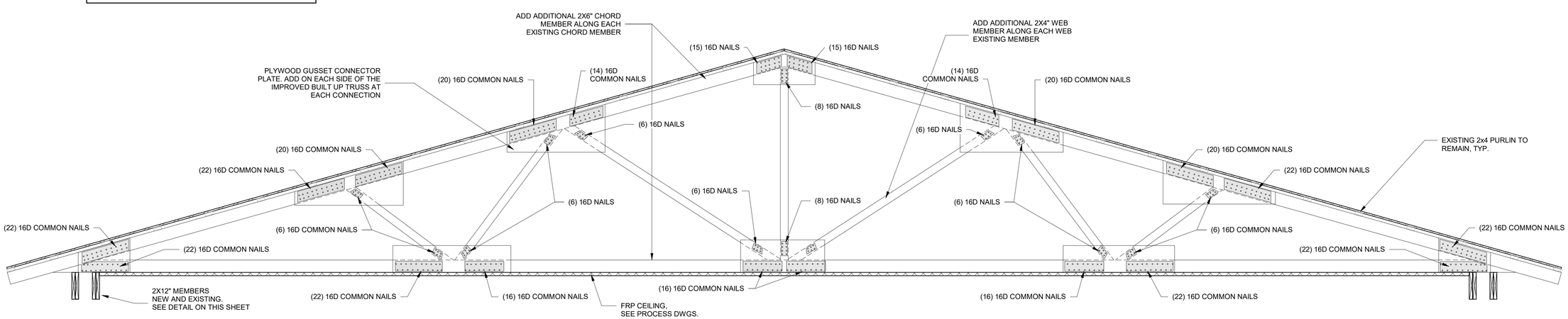

1 S401 TRUSS REPAIR
1/2" = 1'-0"

DCCM
CE Solutions
structural engineers

SWEETSER WASTEWATER IMPROVEMENTS

SWEETSER, INDIANA, 46987

#	Revision	Date
1	ADDENDUM #1	9/14/26

Project #: 25-197
Designed By: JRS
Drawn By: JRS
Checked By: LKL
Date: 08/28/2026

09/14/2026

LAUREN LAI
REGISTERED
No. PE11700794
STATE OF INDIANA
PROFESSIONAL ENGINEER

TRUSS REINFORCEMENT

1

S401

ATTACHMENT NO. 11

PREVIOUS PER

PRELIMINARY ENGINEERING REPORT

WASTEWATER SYSTEM IMPROVEMENTS PROJECT

TOWN OF SWEETSER, INDIANA

TRIAD ASSOCIATES, INC.
ENGINEERING • ARCHITECTURE

5835 Lawton Loop East Drive

Indianapolis, IN 46216

Phone: 317-377-5230

202242A

MARCH 2023

TOWN OF SWEETSER, INDIANA

PRELIMINARY ENGINEERING REPORT
WASTEWATER SYSTEM IMPROVEMENTS PROJECT

MARCH 2023

Owner:

Town of Sweetser, Indiana
113 N. Main Street
Sweetser, IN 46987
(765) 384-5333
Contact: Kyle Taylor, Town Council President

Engineer:

TRIAD ASSOCIATES, INC.
ENGINEERING • ARCHITECTURE
5835 Lawton Loop East Drive
Indianapolis, IN 46216
Phone: 317-377-5230
triadassoc.net

TABLE OF CONTENTS

CHAPTER 1 PROJECT LOCATION 4
A. DESCRIPTION OF EXISTING AND FUTURE/PROJECT AREA 4
CHAPTER 2 CURRENT SITUATION 4
A. LOCATION MAPS 4
B. HISTORY AND CONDITION OF EXISTING FACILITIES 4
1. Wastewater Collection System 4
2. Lift Stations 4
3. Wastewater Treatment Plant 5
C. NEEDS OF THE WASTEWATER SYSTEM 6
1. Health, Sanitation, Security 6
2. Systems Operations and Maintenance 7
3. Oak Hill High School 7
4. Summary of Wastewater System Project Needs 8
CHAPTER 3 FUTURE SITUATION 9
A. EXISTING AND FUTURE POPULATION 9
B. EXISTING AND FUTURE FLOWS 9
CHAPTER 4 EVALUATION OF ALTERNATIVES 10
A. WASTEWATER SYSTEM IMPROVEMENTS ALTERNATIVES 10
1. No Action 10
2. Option A - Rehabilitate Collection System and Wastewater Treatment Plant 10
3. Option B - Replace Collection System, Influent Lift Station and WWTP 11
4. Regionalization - Wastewater Treatment by Another Entity 11
B. SELECTED WASTEWATER SYSTEM ALTERNATIVE 11
CHAPTER 5 EVALUATION OF ENVIRONMENTAL IMPACTS 12
A. DISTURBED AND UNDISTURBED LAND 12
B. HISTORIC AND ARCHITECTURAL RESOURCES 12
C. WETLANDS 12
D. HYDROLOGY 12
1. Surface Water 12
2. Floodplains and Floodways 13

3. Groundwater 13
E. PLANTS AND ANIMALS 13
F. PRIME FARMLAND AND GEOLOGY 13
G. AIR QUALITY 13
H. OPEN SPACE AND RECREATIONAL OPPORTUNITIES 13
I. LAKE MICHIGAN COASTAL PROGRAM 13
J. NATURAL NATIONAL LANDMARKS 14
K. SECONDARY IMPACTS 14
L. MITIGATION MEASURES 14
1. Siltation and Erosion 14
2. Air Quality Impacts 14
CHAPTER 6 SELECTED PLAN 15
A. PROJECT COMPONENTS 15
B. COST SUMMARY 15
C. PROJECT SCHEDULE 16
D. SUSTAINABLE INFRASTRUCTURE/GREEN INITIATIVES 16
CHAPTER 7 LEGAL, FINANCIAL AND MANAGERIAL CAPABILITIES 16
A. RESOLUTIONS 16
B. SRF FINANCE SUMMARY 16
C. LAND ACQUISITION 16
CHAPTER 8 PUBLIC PARTICIPATION 16
D. PUBLIC HEARINGS REQUIREMENTS 16
1. Legal Notice 17
2. Transcripts 17
3. Interested Parties 17
4. Written Comments 17

LIST OF TABLES

Table I……Existing Wastewater Flows
Table II……..Current Treatment Plant Loading
Table III……Design Treatment Plant Flows
Table IV……Design Treatment Plant Loadings
Table V……WWTP Daily Flows vs Rainfall
Table VI…….. Rehab Collection System and Regionalization, Option A
Table VII……. Oak Hill Sewer Service
Table VIII…… Replace Collection System and Regionalization, Option B
Table IX…… Present Worth Comparison of Project Alternatives
Table X…… Selected Plan Cost Summary
Table XI……SRF Financial Summary

EXHIBITS

Exhibit 1……..General Location Map
Exhibit 2……..Existing Service Area Map
Exhibit 3……..Future Service Area Map
Exhibit 4……..Existing Wastewater Collection System
Exhibit 5……..Existing Wastewater Treatment Plant
Exhibit 6A……..Proposed Wastewater Collection System Improvements, Options A
Exhibit 6B……..Proposed Wastewater Collection System Improvements, Options A, east
Exhibit 6C……..Proposed Wastewater Collection System Improvements, Options A, Oak Hill
Exhibit 7…….. Proposed Wastewater Treatment Plant Improvements, Options A
Exhibit 8A…….. Proposed Wastewater Collection System Improvements, Options B
Exhibit 8B…….. Proposed Wastewater Collection System Improvements, Options B, east
Exhibit 9……..Proposed Wastewater Treatment Plant Improvements, Options B
Exhibit 10……SHAARD Map
Exhibit 11……Wetlands Map
Exhibit 12……Floodway Map
Exhibit 13……Soils Map

APPENDICES

Appendix A ..... Preliminary Design Summary
Appendix B ..... NRCS Farmland Impact Form
Appendix C ..... Resolutions
Appendix D ..... Public Hearing Requirements
Appendix E ..... Cost and Effectiveness Certification Form
Appendix F ..... Photos of Wastewater System
Appendix G ..... Photo Log of Collection System
Appendix H ..... Oak Hill High School Letter of Intent

CHAPTER 1 PROJECT LOCATION

A. Description of Existing and Future/Project Area

The Town of Sweetser is located in Franklin, Pleasant and Richland townships, Grant County, Indiana in Sections 31, 32 and 5, 6 of Township 25 North, Range 7 East, 24 North, Range 7 East and can be found on the Sweetser Quadrangle map. The wastewater plant is located in Section 5, Township 24 North, Range 7 East. A general location map is provided as **Exhibit 1**. The existing service area is shown on **Exhibit 2**. Activities related to the proposed improvements will occur within the service area and to the Oak Hill High School to the West of the Town, Shown in Exhibit 3.

CHAPTER 2 CURRENT SITUATION

A. Location Maps

The Town of Sweetser owned and operated wastewater system consists of a treatment plant, five (5) lift stations, and collection sewers. **Exhibit 3** shows the overall collection system. The plant site is shown on **Exhibit 4**.

B. History and Condition of Existing Facilities

1. Wastewater Collection System

The collection system consists of 100% separate sewers by design with no overflow or bypass points. The Town's collection system was originally installed in the late 1970s. The sewers range in size from 8 to 12 inches in diameter and most are constructed of VCP.

Prior to 2014 the Town's collection system conveyed wastewater and discharge into the collection system of City of Marion via an 8" force main at SR 18. In 2014 the Town built its own treatment plant and all wastewater flow within the Town limit is sent to the new plant.

2. Lift Stations

The Town's collection system currently contains 5 lift stations as listed below.

a. Lift Station #1 (Kelly Dr)

Location:	614 Kelly Dr
Pumps:	2 @ 500 gpm (VFDs), 143' TDH
Manufacturer/Model:	
Phase/Hertz/Volts; hp:	3/60 Hz/230 V/460 V; 60 hp
Discharge:	6" force main

b. Lift Station #2 (Short St)

Location:	Short St Between Main St and Greenberry St
Pumps:	2 @ 200 gpm, 59' TDH
Manufacturer/Model:	

	Phase/Hertz/Volts; hp:	3/60 Hz/230 V; 11.3 hp
	Discharge:	6” force main
c.	**Lift Station #3 (Bank)**	
	Location:	250 ft north of Auto-Owners Insurance Marion Claims
	Pumps:	2 @ 100 gpm, 35' TDH
	Manufacturer/Model:	
	Phase/Hertz/Volts; hp:	3/60 Hz/480 V; 5 hp
	Discharge:	4” force main
d.	**Lift Station #4 (Case Lift Station)**	
	Location:	SR 18 & CR 300 W
	Pumps:	2 @ 35 gpm, 59' TDH
	Manufacturer/Model:	
	Phase/Hertz/Volts; hp:	3/60 Hz/230 V; 3 hp
	Discharge:	2 ½ ” force main
e.	**Lift Station #5 (Eagle Dr)**	
	Location:	306 Eagle Dr
	Pumps:	2 @ 35 gpm, 59' TDH
	Manufacturer/Model:	
	Phase/Hertz/Volts; hp:	3/60 Hz/230 V; 3 hp
	Discharge:	3” force main

3. Wastewater Treatment Plant

The wastewater treatment plant installed in 2014 (WWTP) is a Class I, 0.150 MGD extended aeration activated sludge treatment facility consisting of an influent screen, two (2) aeration tanks, two (2) final clarifiers, two (2) digesters, UV disinfection post aeration, and an effluent flow meter. Sludge is aerobically digested then dewatered. Final sludge is land applied. The plant operates under NPDES permit No IN0064165. The current permit expires on December 31, 2023. The plant is authorized to discharge to Pipe Creek via Outfall 001. The receiving water has a seven day, ten year low flow (Q7,10) of 1 cubic feet per second (0.65 MGD) at the outfall location. **Exhibit 4** shows the plant site layout. **Appendix F** contains photos of the plant components.

The Oak Hill Junior & Senior High School is located approximately 3 miles west of the Town. It has its own package plant for wastewater treatment. However, the Oak Hill package plant is aging and operation & maintenance continue to cost the school system resources that could otherwise be put toward educational priorities. The school system also has an administration building to the south of the school campus that is presently on an individual septic system. They are hopeful of being able to connect to the Sweetser system for treatment. A Letter of Intent between both parties has been executed and is included in **Appendix H**.

C. Needs of the Wastewater System

1. Health, Sanitation, Security

Clear water flows are classified as either infiltration or inflow (I/I). Infiltration enters the system from the surrounding soil through cracks, breaks and separated joints in the sanitary sewer lines and manholes. Inflow enters the sewer system through direct connections such as roof downspouts, storm sewer cross-connections, drainage inlets, sump pumps etc. The existing collection system experiences a significant amount of infiltration and inflow (I/I) in the lines during wet weather. This causes wide fluctuations in volume at the WWTP which has resulted in violations of the NPDES permit and increased operational costs due to treating clear water.

Residents in a community are adversely affected by I/I because it adds clear water to the sewers which increases the load on the system. Once clear water enters the sewers it must be transported and treated at the plant like regular sanitary waste. I/I can overload the sewer system resulting in sewage overflows through manholes or backups in service lines which can flood basements or households. Overflow occurrences put public health at risk and is a violation of local, state and federal environmental regulations. Overflows could release wastewater and potential pathogens into streets, waterways and homes which increase potential health risks. Wastewater overflows into ditches and drainageways can contaminate water bodies. In addition, large volumes of clear water I/I disrupts the wastewater treatment process and poorly treated wastewater could be discharged to the environment which is a health and sanitation risk.

There are various costs associated with I/I. Overflow costs are associated with road and waterway cleanup and possible fines from regulatory agencies. Sewer backups into basements or households can result in litigation and liabilities for the responsible municipality. If the I/I is not reduced, eventually new homes or businesses may not be permitted to connect to the system which increases costs to the present users. Home values could be adversely affected as well. I/I cost consumers large amounts of money for the unnecessary treatment of clear water flows. I/I also puts additional wear on treatment equipment which lowers the life expectancy. The costs for processing additional clear flows from I/I are passed directly back to the residents and businesses in Town in the form of rate increases. This reduces the amount of money that users have to spend on other necessary life expenditures.

The Town has made a few system improvements in an effort to reduce I/I. **Table I** shows the historical influent volume averages 0.168 MGD between 2021 and 2022 which is over the plant capacity of 0.150 MGD. A graph comparing influent flows to rain events is provided on **Table V** from 2019 to 2020. **Table V** shows some relationship between rainfall events and increasing wastewater flows.

The Town has a long history of IDEM issued non-compliance, violations, and poor ratings in inspection reports as a direct result of the operation issues. In addition, several inspection reports contained issues with malfunctioning or inoperable equipment.

2. Systems Operations and Maintenance

a. Collection System O&M

The original sewer system that contains clay pipe was installed in 1970s. I/I into the system has increased annually.

The Town invested ARPA money to have the collection system cleaned & televised in 2022. A review of the tapes indicated that the clay pipes had leaky joints and defects that need to be repaired. Some sewer main segments have developed cracks and deposits that requires cleaning and lining. Many of the existing manholes have leaking joints, chimneys, and have open pick hole lids, which increase the amount of I&I into the collection system and need to be replaced. Many manholes were found to have high water marks and evidence of I/I at the joints. These manholes need to be grouted and lined.

It is suspected that many downspouts and sump pumps are improperly discharging to the sanitary system as well. This is a violation of the Town's Sewer Use Ordinance (SUO) and the Town will be policing and enforcing disconnection of these.

b. Treatment Plant O&M

The plant has been having non compliance issues of NPDES permit from IDEM inspection for the last few years. An inspection of the plant and review of the design parameters of the existing components indicates the following:

- The influent drum screen gets easily clogged and consequently overflows without proper notification.
- One of the aeration tanks was not operated properly at one time causing anaerobic conditions within the tank.
- The clarifiers were not operated properly at one time resulting in excessive solids in effluent.
- There are some accessibility issues at the aeration tanks.
- Sludge waste and return pump station improvements are necessary to improve return & wasting.
- Solids Handling improvements are needed in order to make processing easier and timely.
- The plant building has high humidity and mold issue on walls and ceilings.
- Moisture buildup in electric control panels that causes rust and potential system failure.

3. Oak Hill High School

The Oak Hill High School is located at the intersection of US 18 (Delphi Pike) and N 800 W 27, approximately 3 miles west of the Town. The school currently collects and treats its own wastewater via a small onsite package plant with daily average flow of 6,800 gpd. The school would like to have wastewater treatment by Sweetser. This will eliminate the need of operating and maintaining the school's WWTP. The Town and the school have executed an MOU to tie high

school and its administration building to the Town's system. This would also allow properties in the vicinity of the school to connect to the Sweetser system and eliminate potentially failing septic systems.

4. Summary of Wastewater System Project Needs

Based on the results of the system evaluation the following are recommended.

a. Collection System

- Grout & line manholes
- Replace manhole lids and castings, repair manhole chimneys
- Line sewers with poor conditions
- Sewer point repairs

b. Lift Station

- Replace Lift Station #1 Lids
- Lift Station #3 site improvements
- Line Lift Station #1-#5 wet wells

c. Oak Hill High School Regionalization

- New Lift Station located at the school
- Administration building grinder pump and force main
- Transmission force main to the Town's collection system

d. Treatment Plant

- Replace the influent screen with a better system
- Add catwalk between two aeration tanks for better access
- Add aeration tank influent baffles
- Add level control & actuators on sludge telescoping valves for RAS/WAS
- Add electrical control panel enclosure & repairs
- Solids handling improvements including an enclosure for the dumpsters
- Miscellaneous lab improvements
- Building moisture control & ventilation
- Air line improvements for digester air
- Re-locate sampler, potable well re-wiring, lighting improvements

CHAPTER 3 FUTURE SITUATION

A. Existing and Future Population

The 2020 U.S. Census records the Sweetser population as 1,066 which is a decrease of nearly 13% from the previous decade. The Indiana Business Research Center does not have projections for the Town but predicts the population in Grant County will decrease. Wastewater records indicate there are 538 wastewater users. The non-residential users are domestic in nature and mostly serve the local community.

Past census records show there are wide fluctuations in population. Development records indicate an average of only one building permit issued annually. There are no known significant commercial or industrial users who are locating to the area. The surrounding area is agricultural. There is one school located within Town, Sweetser Elementary School. The population growth over the past 50 years averages 1.0%. For purposes of this report a modest 1% population increase will be assumed, resulting in a population of 1,097 by 2040. The growth rate for non-residential users will mirror residential growth since they mostly provide service to the local community.

Economic growth within the service area is expected to parallel population trends. Heavy commercial and industrial users in the planning area are currently non-existent. This is not expected to change within the 20 year planning period. It is projected that the Town's population will remain stable with minor increases in the near future.

B. Existing and Future Flows

Average daily flows processed at the plant are 0.146 MGD based on 2019 to 2022 MROs, which is approximately 97.3% of the design average flow of 0.150 MGD. Moreover, wet weather flows average nearly 0.48 MGD and have reached as high as 0.93 MGD which exceeds the current peak design flow. These high flows are attributed to infiltration and inflow in the collection system. The design waste strength for BOD and Ammonia are 215 mg/L and 35 mg/L, the MRO data showed a dry weather average of 131 mg/L and 22 mg/L which means the plant still have treatment capacity in terms of loadings. **Table I** and **Table II** shows historical flows and loadings. **Table V** charts the flows as compared to rainfall.

The future flow increase due to the population growth will not exceed the current plant capacity. However, the increasing peak flow due to I/I during wet weather are likely to worsen if no action is taken to the collection system or the plant. **Table III** and **Table IV** shows future flows and loadings. Triad has done a thorough investigation of the Town's collection system in terms of I/I. Numerous manholes were found not properly sealed between cone sections and the majority of the manholes have pick holes that allow for extra inflow during wet weather. The four main lift stations all show signs of I/I in the wet well, with Lift Station #4 (Case Lift Station) showing the most severe leaking with multiple cracks and pipe seals contributing I/I. These can be found in **Appendix G**. The total combined I/I in current system is estimated to be above 0.5 MGD which is over 30% of the average daily flow to the plant.

CHAPTER 4 EVALUATION OF ALTERNATIVES

A. Wastewater System Improvements Alternatives

Alternatives were evaluated based on reliability, practicality, technical feasibility, ease of implementation, environmental soundness and cost effectiveness. The following were evaluated:

1. No Action
2. Rehabilitate the Collection System and Treatment Plant
3. Replace the Collection System and Treatment Plant
4. Regionalization

1. No Action

The no action alternative consists of maintaining the current method for collection and treatment with no repairs or rehabilitation efforts, providing a status quo situation. This alternative is not considered to be practical or environmentally sound as it would do nothing to relieve problems in the system or upgrade the components to assure optimal operation. The collection system has a history of I/I which causes high flows at the plant and the unnecessary treatment of clear water. In addition, the plant that is currently in operation is aged and needs to be modified or replaced.

2. Option A - Rehabilitate Collection System and Wastewater Treatment Plant

Under this option, improvements would be made to selected portions of the collection system in order to optimize the removal and reduction of I/I. This would entail lining or replacing sewers and laterals that were identified through televising as contributing to clear water intrusion in the system. Lift Station #1 through #4 will need wet well lining. Lift Station #1 and #3 will need wet well additional improvements. Treatment facility work would include replacing existing influent screen with mechanical and manual bar screen. A new catwalk will be installed between two aeration tanks for easier access to the shutoff valves. The plant control panels will be improved to be more weather resistant and with an enclosed room to prevent future damage due to moisture buildup within the plant building. The existing RAS WAS pump station will be added with level controls. Some other miscellaneous improvements are also included in this alternative.

In order to connect Oak Hill Junior & Senior High School to the Town's system, a new lift station and force main will be installed from the Oak Hill High School to the Town's WWTP. The existing school package plant will be demolished. The septic system at the administration building will be decommissioned and a grinder station and force main will also be installed to connect the Administration building to the force main. Properties in the vicinity with failing septic systems will be able to connect to this system utilizing a grinder pump station. Although this will add 0.0068 MGD of daily flow to the Town's wastewater system, the potential I/I flow reduction could be over 15% with all proposed manhole/sewer lining and point repairs, which gives enough extra capacity for the existing WWTP to take the flow from the school. Cost estimates for Oak Hill High School sewer service are provided on **Table VI**.

Exhibits 6A, 6B, 6C and **7** show the proposed collection system and plant improvements. Cost estimates for Option A, rehabilitate the existing wastewater system, are provided on **Table VII**.

Rehabilitating collection lines and laterals would assure that the majority sources of I/I are removed in selected areas. Rehabilitating the current plant would allow the facility to be operated more efficiently and safely. The main disadvantage is that these improvements may not address all the I/I issue and plant operation issues.

3. Option B - Replace Collection System, Influent Lift Station and WWTP

The original collection system that is in poor condition would be replaced with new manholes and watertight PVC sewers to eliminate I/I. Treatment would be provided by a new extended aeration facility that is sized to treat wet weather peak flows. Lines will be replaced with the same size sewers. Included would be replacement of laterals located within the right of way. A new lift station and force main will be installed from the Oak Hill High School to the Town's WWTP. Treatment facility work would include all improvements in Option A and a new plant building with better ventilation and humidity control. **Exhibits 6C, 8A, 8B and 9** show the proposed collection system improvements and plant layout. Cost estimates for the Option B system replacement are provided on **Table VIII**.

Replacing collection lines and laterals would assure that most sources of I/I are removed in selected areas. Rehabilitating the current plant and constructing a new plant building would allow the facility to be operated more efficiently and safely. The main disadvantage is the higher cost and environmentally unfriendly choice of not using pipes and structures that are still in good shape. User rates would increase due to the capital costs of installing new lines and a plant.

4. Regionalization - Wastewater Treatment by Another Entity

Regionalization entails transporting to another plant for treatment which is dependent upon the proximity, operational circumstances and willingness of the entity to accept the sewage. The Town used to send all sewage to City of Marion before the WWTP was built in 2014.

The existing collection system would have to be rehabilitated or replaced in order to eliminate I/I and the high cost of outside treatment charges. Treatment could be provided by the Marion facility. The lift station pumping scheme would need to be modified so that a new main lift station could pump to Marion.

Advantages of this alternative include regionalized operation and maintenance while still providing a technically acceptable, environmentally sound choice for treatment. However, connection to Marion is not considered a feasible option due to the distance, the cost of new pumping, CSO and existing I/I issues at Marion, and the political difficulty of executing an agreement. This alternative would also require the rehabilitation of an old force main used to send wastewater to Marion that was abandoned. Therefore, this option was not evaluated further.

B. Selected Wastewater System Alternative

Option A, Rehabilitate Collection System and Wastewater Treatment Plant is the selected alternative after the alternatives were evaluated based on cost effectiveness, technical feasibility, practicality, reliability, ease of implementation, and environmental soundness.

A Cost and Effectiveness Analysis that meets the minimum requirements of the Water Resources Reform and Development Act of 2014 was conducted for feasible options. The analysis and Life Cycle Present Worth comparisons are provided on **Table IX**. **Appendix E** contains the Cost and Effectiveness Certification Form.

CHAPTER 5 EVALUATION OF ENVIRONMENTAL IMPACTS

A. Disturbed and Undisturbed Land

Construction related to the plant will occur at the existing treatment plant site. Land disturbance around the new sewer force main installation will be approximately 12 feet wide. All sewer lines will be open cut and installed in and adjacent to the existing rights of way and utility easements. All work areas have previously been disturbed. No tree removal is necessary. Streets disturbed during construction will be patched and a surface asphalt layer placed. Disturbed areas will be restored to the existing land use. The adjacent areas that are grassed will be reseeded when complete.

B. Historic and Architectural Resources

There are scattered historic sites in the Town. Sites are primarily located along Main Street. There are no known historic, architectural or archaeological sites which would be impacted by this project as construction activities will be limited to alleys, disturbed areas, and rights of way. No curbs, streets, gutters, sidewalks, or curbside plantings in a historic district will be affected. **Exhibit 10** shows the SHAARD Map.

C. Wetlands

There are a few wetlands within the Town limits and they are classified as a freshwater ponds used for detention. **Exhibit 11** shows the wetlands in the region. Wetlands will not be adversely impacted by the construction or operation of the project. Mitigation measures to lessen and compensate for wetland impacts cited in comment letters about the project from the Indiana Department of Natural Resources and the U.S. Fish and Wildlife Service will be implemented.

D. Hydrology

1. Surface Water

The surface water of the Town includes the Pipe Creek crossing east of the Town and some fresh water detention ponds. The project will not adversely affect waters of high quality listed in 327 IAC 2-1-2(3), exceptional use streams listed in 327 IAC 2-1-11(b), Natural, Scenic and Recreational Rivers and Streams listed in 312 IAC 7-(2), Salmonid Streams listed in 327 IAC 2-1.5-5(a)(3), or waters on the Outstanding Rivers list as shown on the Natural Resources Commission Non-rule Policy Document.

2. Floodplains and Floodways

The area adjacent to Pipe Creek is considered a floodway and is located on the east and south sides of Town. A flood map is provided as **Exhibit 12**. The project will not affect the Lake Michigan Coastal Zone.

3. Groundwater

Sand and gravel deposits in the area yield no greater than 100 gpm, and range in thickness from one hundred to five hundred feet. If necessary, dewatering will be employed during construction with the flow directed to a sedimentation basin prior to being discharged to surrounding surface waters. The project will not impact a drinking water supply or sole source aquifer. The area does not contain a significant water supply or sole source aquifer. The area is not contained within the St. Joseph Aquifer basin.

E. Plants and Animals

The construction and operation of the project will not negatively impact state or federal-listed endangered species or their habitat. The project will be implemented to minimize impact to non-endangered species and their habitat. Mitigation measures cited in comment letters from the Department of Natural Resources and the U.S. Fish and Wildlife Service will be implemented.

F. Prime Farmland and Geology

The Town is mostly developed and does not contain prime farm ground. The surrounding area is primarily agricultural. The Farmland Conversion Impact Rating Form from the Natural Resources Conservation Service is provided in **Appendix B.** The major soil types in the region are Crosby and Brookston which can both be hydric. There are also small pockets of Miami Silt Loams. A soils map is provided as **Exhibit 13**. Soil types do not include karst or bedrock.

G. Air Quality

Construction activities may generate some noise, fumes, and dust normally resulting from such activity. The dust, fumes and noise are short term impacts, lasting only during the construction phase. Construction activities should not impact ozone, airborne pollutants or other current or future air quality concerns.

H. Open Space and Recreational Opportunities

The project's construction and operation will neither create nor destroy open space and recreational opportunities.

I. Lake Michigan Coastal Program

The project will not affect the Lake Michigan Coastal Zone.

J. Natural National Landmarks

The project will not affect the Lake Michigan Coastal Zone.

K. Secondary Impacts

The Town, through the authority of its Council, planning commission, or other means will ensure that future development, as well as future projects connecting to SRF-funded facilities, will not adversely impact archaeological/historical/structural resources, wetlands, wooded areas, or other sensitive environmental resources. The Town will require new development and treatment works projects to be constructed within the guidelines of the U.S. Fish and Wildlife Service, IDNR, IDEM, and other environmental review authorities.

L. Mitigation Measures

1. Siltation and Erosion

Siltation and erosion will be kept to a minimum. Any mitigation measures mandated by authorized reviewing agencies to reduce or eliminate waterway contamination will be implemented. Mitigative measures to limit erosion and siltation will include the following:

a) Erosion and sediment control measures required by the project specifications will require that the contractor provide a schedule for clearing, grading, excavating and restoring disturbed areas, along with a description of measures to be used during construction to ensure erosion/ sediment control. The program shall meet all applicable federal, state, and local requirements.
b) Natural vegetation will be retained wherever feasible.
c) Excavations will be limited to right of ways where possible.
d) Appropriate agronomic practices (sediment basins, seeding, mulching) will be provided to control runoff, including shoreline and stream crossings, if applicable.
e) Drainage systems, including surface and subsurface drainage, will be returned to their natural state as soon as possible, if disturbed.
f) Roadways and parking lots will remain stabilized during construction to the extent possible.
g) Construction activities will be scheduled to avoid excessively wet conditions when possible.
h) No more than 100 feet of open trench will be allowed. Excavated material will be kept to the upland side of the trench. Excess material will be used elsewhere on the project.
i) The existing topsoil will be reused during the restoration process.
j) If necessary, discharge from dewatering will be directed to sedimentation basins prior to discharging into surrounding surface waters.

2. Air Quality Impacts

The adverse impacts caused by dust may be alleviated by periodically wetting the exposed soil and unpaved roadways to reduce the suspension of particles. To reduce noise impacts, work activities can be limited to normal daytime hours. Proper precautions will be taken to assure that

construction activities do not impact ozone, airborne pollutants or other current or future air quality concerns.

CHAPTER 6 SELECTED PLAN

The selected plan for the Wastewater System, Option A, would make improvements to selected portions of the collection system in order to optimize the removal and reduction of I/I. This would entail lining sewers that were identified through televising as contributing to clear water intrusion in the system. The lift stations would be rehabbed to reduce the amount of I/I getting into the wet wells. Treatment facility work would include new influent screen, solids handling improvements, aeration tank catwalk, influent baffles, RAS WAS improvements, lab improvements, etc. **Exhibits 6A, 6B, 6C** and **7** show the proposed collection system and plant improvements. **Appendix A** contains the Design Summary for existing units and proposed improvements.

A. Project Components

Description	Unit	Quantity
Wastewater System Improvements		
8" Clay Sewer	LF	14,449
10” Clay Sewer	LF	14,524
12” Clay Sewer	LF	6,589
8” PVC Sewer	LF	641
10” PVC Sewer	LF	560
Manhole	EA	70
Lift Station	EA	4
Influent Screen	LS	1
Aeration Tanks	EA	2
Electrical	LS	1
RAS/WAS wet well	LS	1
Lab	LS	1
Sampler	EA	1
Digester	EA	2

B. Cost Summary

Itemized cost estimates for the proposed system improvements are shown on **Table VI and VII**. The Selected Plan Cost Summary is provided on **Table X**. The financial summary of the selected project is listed in **Table XI**.

C. Project Schedule

Submit PER to SRF	April 2023
SRF Approval of PER	July 2023
Submit Plans & Specs to IDEM	November 2023
IDEM Approval of Plans & Specs	January 2024
Bid Authorization and Advertise for Bids	February 2024
Loan Closing	March 2024
Bid Award	March 2024
Initiation of Construction	April 2024
Substantial Completion	April 2025
Complete Construction, Initiation of Operation	May 2025

D. Sustainable Infrastructure/Green Initiatives

The Green Project Reserve Sustainability Incentive cannot be cost effectively achieved through this project.

CHAPTER 7 LEGAL, FINANCIAL AND MANAGERIAL CAPABILITIES

A. Resolutions

Appendix C contains a resolution designating an authorized signatory with regards to project matters and a resolution approving the PER and authorizing submittal to IDEM.

B. SRF Finance Summary

An initial analysis of financial capabilities was completed using the best available records to determine costs to the community and is provided on **Table XI**, SRF Financial Summary. The Town will develop a Fiscal Sustainability Plan (FSP) that meets the minimum requirements listed in the Federal Water Pollution Control Act Section 603(d)(1)(E)(i) and will submit a completed FSP Certification Form prior to the final disbursement request related to the primary project.

C. Land Acquisition

No land acquisition is necessary for this project.

CHAPTER 8 PUBLIC PARTICIPATION

D. Public Hearings Requirements

In accordance with the requirements for SRF funding and Indiana Rule 327 IAC 13-8-13, a public hearing was held on March 28, 2023 at 7:00 p.m. at the Town Hall to discuss the PER and solicit citizens' views, questions and concerns regarding the proposed project. The PER was available for review along with a written summary of the project.

1. Legal Notice

A Publisher's Affidavit and Public Hearing Notice are included in **Appendix D1** to verify compliance with the minimum public notice requirement of ten (10) days. The Preliminary Engineering Report was made available for review during this time and at the public hearing.

2. Transcripts

Minutes of the Public Hearing are provided in **Appendix D2**.

3. Interested Parties

Appendix D3 contains a list of parties who have demonstrated an interest in receiving a copy of the Environmental Assessment (EA)/Finding of No Significant Environmental Impact (FNSEI).

4. Written Comments

A five-day period following the public hearing was reserved for receipt of written public comments concerning the project. See **Appendix D4.**

TABLE I
Existing Wastewater Flows
Town of Sweetser, Indiana

Average Design Flow 0.150 MGD

Domestic	[1]	146,406	gpd
Commercial/Indust/Inst		NA	gpd
Total DCI		146,406	gpd
TOTAL EXISTING FLOW		**146,406**	gpd
Peaking Factor	[2]	3.78	
Peak DCI	[3]	553,698	gal
Peak Flow		385	gpm

[1] Based on 2019-2022 MRO Data
[2] Derived from 10 State Standards & population of 1066
[3] Total DCI x Peaking Factor

Flow meter calibrated	Yes
Flows appear accurate	Yes

TABLE II
CURRENT TREATMENT PLANT WASTELOAD
Town of Sweetser, Indiana

		Concentration (mg/l)	Daily Load (lb)
Influent			
	CBOD	119.7	146.2
	TSS	136.6	166.7
	NH3-N	21.9	26.7
	P	4.3	5.3
Effluent			
	CBOD	4.1	5.0
	TSS	4.9	6.0
	NH3-N	0.6	0.7
	P	0.11	0.1

Dates of MRO's: January 2019 - December 2021
Average Flow: 0.146 MGD

TABLE III
DESIGN TREATMENT PLANT FLOWS
Town of Sweetser, Indiana

Existing Flows	146,406	gpd	
Future Flows	2,943	gpd	
Oak Hill School	6,200	gpd	
Estimated I/I Reduction	20000	gpd	
Total DCI	**135,549**	**gpd**	
AVERAGE DESIGN FLOW	**0.150**	**MGD**	[1]
Peak Flows	511,523	gpd	peaking factor 3.77
Wet Weather Infiltration/Inflow			[2]
PEAK DESIGN FLOW	**0.512**	**MGD**	

[1] Proposed Design Average Flow
[2] Included in Existing and Future flows

TABLE IV
DESIGN TREATMENT PLANT LOADINGS
Town of Sweetser, Indiana

Existing Flows	0.146	MGD
Future Flows	0.003	MGD
Total Design Flows	**0.150**	MGD

		Concentration (mg/l)	Design Concentration (mg/l)	Loadings [3] (lb/day)
Influent CBOD5	[1]	130.9	133	166
	[2]	220.0		
TSS	[1]	136.6	138	173
	[2]	220.0		
NH3-N	[1]	22.0	22	28
	[2]	35.0		
P	[1]	4.3	4	6
	[2]	10.0		
Dates of MRO's	[1]	2019-2021		

[1] Concentration derived using actual loadings for existing flows
[2] Future loadings based on 10 State Standards

TAI

Mar 2023

Table V Sweetser Wastewater Treatment Plant
Daily Flows vs Rainfall
(Jan 2021 to Dec 2021)

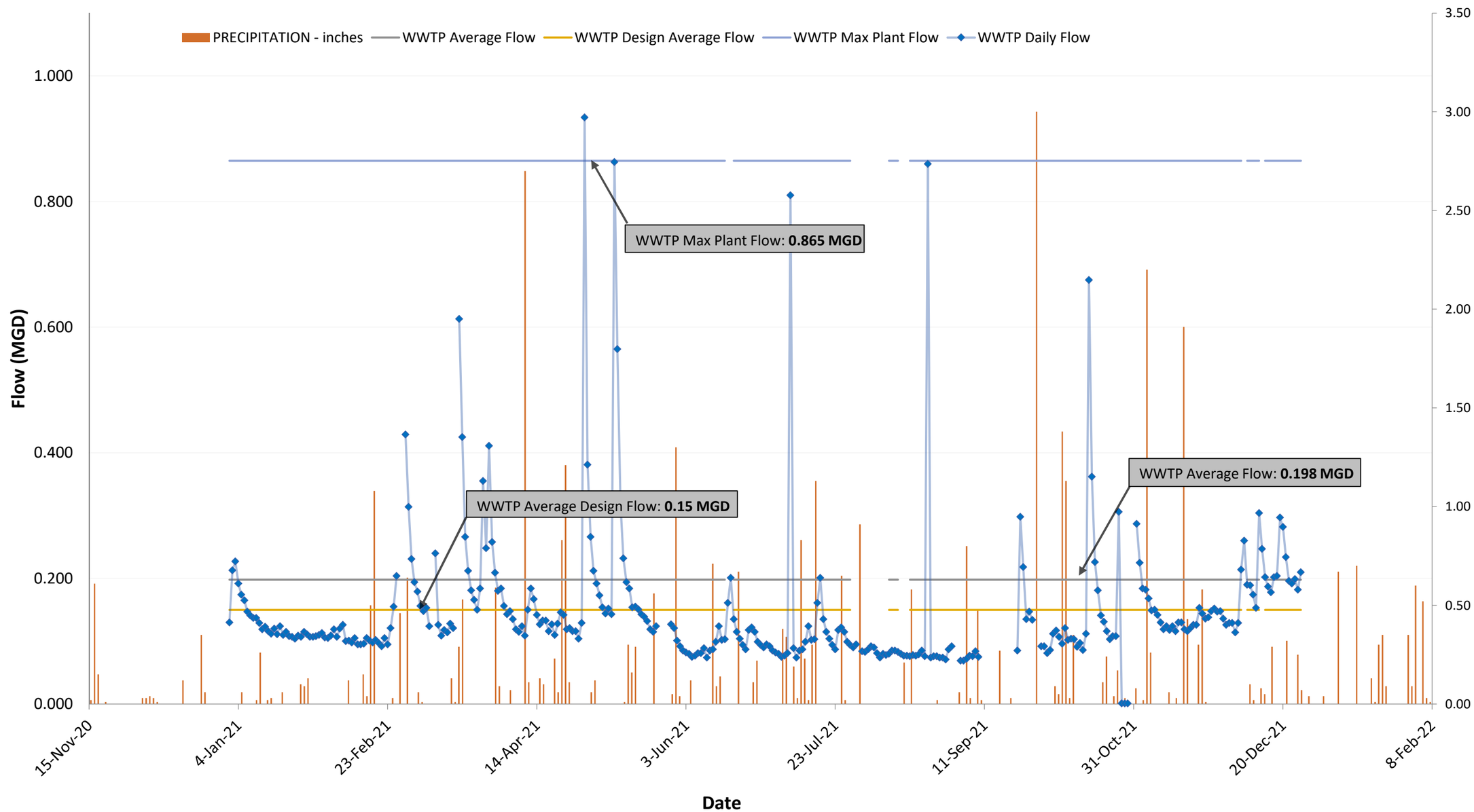

TAI

Mar 2023

TABLE VI
COST ESTIMATE - OPTION A
REHABILITATE EXISTING COLLECTION SYSTEM AND WWTP
Town of Sweetser, Indiana

Item	Unit	Quantity	Unit Cost	Extended	Life	Short Lived Asset Res.	20 Yr.Salvage Value
Collection System Rehab							
8" Clay Sewer Lining	lf	14,449	$43	$621,307	50	$0	$372,784
10" Clay Sewer Lining	lf	14,524	$47	$682,628	50	$0	$409,577
12" Clay Sewer Lining	lf	6,589	$51	$336,039	50	$0	$201,623
Service Connection Reinstatement	ea	420	$185	$77,700	50	$0	$46,620
Manhole Replacement	ea	5	$12,000	$60,000	50	$0	$36,000
Manhole Lining	ea	65	$3,400	$221,000	50	$0	$132,600
Raise Manhole & Replace Casting & Lid	ea	121	$2,400	$290,400	50	$0	$174,240
Lift Station #1 Wet Well Lining	ls	1	$11,000	$11,000	50	$0	$6,600
Lift Station #2 Wet Well Lining	ls	1	$14,000	$14,000	50	$0	$8,400
Lift Station #3 Wet Well Lining	ls	1	$8,000	$8,000	50	$0	$4,800
Lift Station #4 Wet Well Lining	ls	1	$11,000	$11,000	50	$0	$6,600
Lift Station #5 Wet Well Lining	ls	1	$10,000	$10,000	50	$0	$6,000
Manhole Chimney Work	ea	23	$1,200	$27,600	50	$0	$16,560
8" PVC Sewer Lining	lf	641	$43	$27,563	50	$0	$16,538
10" PVC Sewer Lining	lf	560	$47	$26,320	50	$0	$15,792
Point Repair in 10" PVC Gravity Sewer	ls	1	$10,000	$10,000	20	$0	$0
Lift Station #3 Improvements & Site Drainage	ls	1	$65,000	$65,000	20	$0	$0
Lift Station #1 Improvements	ls	1	$8,000	$8,000	20	$0	$0
Subtotal Collection System				**$2,507,557**			
Regionalization							
Oak Hill School Lift Station & Force Main	ls	1	$995,000	$995,000	50	$0	$597,000
Administration Complex Sewer Service	ls	1	$35,000	$35,000	50	$0	$21,000
Subtotal Regionalization				**$1,030,000**			
Treatment Plant Rehab							
New Influent Screen Complete	ls	1	$305,000	$305,000	20	$0	$0
Solids Handling Improvements [1]	ls	1	$65,000	$65,000	20	$0	$0
Electrical Enclosure Room + Panels	ea	1	$35,000	$35,000	20	$0	$0
Catwalk & Stairs for Aeration Tank & Digesters	ls	1	$70,000	$70,000	20	$0	$0
RAS/WAS Improvements	ls	1	$25,000	$25,000	20	$0	$0
Relocate Sampler	ls	1	$2,500	$2,500	N/A	N/A	N/A
Aeration Tank Inflluent Baffle	ea	2	$5,000	$10,000	20	$0	$0
Lab Improvments	ls	1	$7,500	$7,500	20	$0	$0
Air Line for Digesters	ls	1	$20,000	$20,000	20	$0	$0
Well Wiring Repair & Building Lighting	ls	1	$14,000	$14,000	20	$0	$0
Moisture Control	ls	1	$75,000	$75,000	20	$0	$0
Subtotal Treatment Plant				**$629,000**		$0	$2,072,734

[1] Polymer Feed, Pump & Piping, Shelter

		Total Construction	**$4,166,557**
		Preliminary Eng Rpt	$43,000
Additional, Operations, Maintenance		Asset Management Plan	$25,000
& Replacement		Inspection	$124,000
Operating Labor	$0	Grant Administration	$56,000
Repairs	$2,000	Bond, Rate, Legal	$175,000
Energy	$5,000	Engineering Design	$410,000
Administration	$0	Construction Engineering	$20,000
Materials & Supplies	$2,000	Railroad Permitting	$5,000
Contract (Sew clean, sludge)	$0	Labor Standards	$7,500
Billing	$0	Total Non-construction	**$865,500**
Replacement	$0	Contingencies (10%)	$416,656
Total Annual OM&R	**$9,000**	**TOTAL PROJECT**	**$5,448,713**

TAI

Mar 2023

TABLE VII
COST ESTIMATE
Oak Hill Sewer Service
Town of Swetser

ITEM	Unit	Quantity	Unit Cost	Extended
Lift Station & Wet Well Structures	ls	1	$72,000	$72,000
Pump Package & Controls	ls	1	$70,000	$70,000
Piping, Valves, Fittings	ls	1	$10,000	$10,000
Electrical	ls	1	$15,000	$15,000
Sitework, Fence	ls	1	$20,000	$20,000
Demiltion of Existing WWTP	ls	1	$45,000	$45,000
Flow Metering	ls	1	$7,500	$7,500
3" Force Main	lf	18,500	$40	$740,000
Highway Crossing	ls	1	$5,250	$5,250
Connection to Sweetser	ls	1	$250	$250
Air Release Structure & Valve	ls	1	$5,000	$5,000
Restoration	ls	1	$5,000	$5,000
Administration Bldg E-One Grinder Pit	ls	1	$10,000	$10,000
1 1/2" Force Main	lf	560	$25	$14,000
Railroad Crossing	ls	1	$8,000	$8,000
Valves	ea	2	$800	$1,600
Close-out Existing Septice Tank	ls	1	$1,400	$1,400
Subtotal Treatment Plant				**$1,030,000**
			Total Construction	**$1,030,000**

TAI

Mar 2023

TABLE VIII
COST ESTIMATE - OPTION B
REPLACE COLLECTION SYSTEM AND WWTP
Town of Sweetser, Indiana

Item	Unit	Quantity	Unit Cost	Extended	Life	Short Lived Asset Res.	20 Yr.Salvage Value
Collection System Replacement							
8" Gravity Sewer	lf	15,090	$75	$1,131,750	50	$0	$679,050
10" Gravity Sewer	lf	15,084	$85	$1,282,140	50	$0	$769,284
12" Gravity Sewer	lf	6,589	$95	$625,955	50	$0	$375,573
Point Repair in 10" PVC Gravity Sewer	ls	1	$10,000	$10,000	20	$0	$0
Service Connection Reinstatement	ea	420	$185	$77,700	50	$0	$46,620
Manhole Replacement	ea	70	$12,000	$840,000	50	$0	$504,000
Lift Station #1 throuh #5 Wet Well Replacemer	ea	5	$60,000	$300,000	50	$0	$180,000
Lift Station #3 Improvements & Site Drainage	ls	1	$50,000	$50,000	20	$0	$0
Lift Station #1 Improvements	ls	1	$8,000	$8,000	20	$0	$0
Subtotal Collection System				**$4,325,545**			
Regionalization							
Oak Hill School Lift Station & Force Main	ls	1	$1,030,000	$1,030,000	50	$0	$618,000
Subtotal Regionaliztion				**$1,030,000**			
Treatment Plant							
Influent LS VFDs & Controls	ls	1	$24,000	$24,000	20	$0	$0
Influent Lift Station	ls	1	$120,000	$120,000	20	$0	$0
Aeration Tanks	ea	2	$360,000	$720,000	20	$0	$0
Mixers for Aeration Tanks	ea	2	$48,000	$96,000	20	$0	$0
Clarifiers (30' dia.)	ea	2	$270,000	$540,000	20	$0	$0
RAS/WAS Station	ls	1	$96,000	$96,000	20	$0	$0
Fine Bubble Diffusion	ls	1	$96,000	$96,000	20	$0	$0
Blowers with VFDs	ea	5	$48,000	$240,000	20	$0	$0
UV Disinfection, Post Aeration	ls	1	$360,000	$360,000	20	$0	$0
Digester	ea	2	$192,000	$384,000	20	$0	$0
Chemical Feed	ea	1	$18,000	$18,000	10	$1,800	$0
Geo-Tube pad, drain, poly feed	ls	1	$132,000	$132,000	20	$0	$0
Flow Splitter	ea	1	$72,000	$72,000	20	$0	$0
Sampler	ea	2	$18,000	$36,000	10	$3,600	$0
Flow Meters (influent & effluent)	ea	2	$6,000	$12,000	10	$1,200	$0
Controls, SCADA, DO Probes	ls	1	$288,000	$288,000	20	$0	$0
Site Piping	ls	1	$96,000	$96,000	20	$0	$0
Electrical	ls	1	$120,000	$120,000	20	$0	$0
Lab/Office, UV shelter	ls	1	$270,000	$270,000	20	$0	$0
Site Work	ls	1	$60,000	$60,000	N/A	N/A	N/A
Subtotal Treatment Plant				**$3,780,000**			
						$6,600	**$3,172,527**
		Total Construction		**$9,135,545**			

		Preliminary Eng Rpt	$43,000
Additional, Operations, Maintenance		Asset Management Plan	$45,678
& Replacement		Inspection	$730,844
Operating Labor	$0	Grant Administration	$15,000
Repairs	$2,000	Bond, Rate, Legal	$150,000
Energy	$7,000	Engineering Design	$913,555
Administration	$0	Construction Engineering	$182,711
Materials & Supplies	$2,000	Railroad Permitting	$5,000
Contract (Sew clean, sludge)	$0	Labor Standard	$30,000
Billing	$0	Total Non-construction	**$2,115,787**
Replacement	$6,600	Contingencies (10%)	$913,555
Total Annual OM&R	**$17,600**	**TOTAL PROJECT**	**$12,164,887**

TABLE IX

Present Worth Cost Comparison
Proposed Project Alternatives
Town of Sweetser, Indiana

	Option A Rehab Existing System/Regionalization TABLE VI	Option B Replace Existing Systems/Regionalization TABLE VII
Collection System	$2,507,557	$4,325,545
Wastewater Treatment	$629,000	$3,780,000
Regionalization	$1,030,000	$1,030,000
Total Capital Costs	**$4,166,557**	**$9,135,545**
Non-construction Costs	$865,500	$2,115,787
Contingencies	$416,656	$913,555
Total Project Cost	**$5,448,713**	**$12,164,886**
Annual Additional OM&R	$9,000	$17,600
Present Worth OMR & Replace [1]	**$172,657**	**$337,640**
Salvage Value	$2,072,734	$3,172,527
Present Worth of Salvage Value [2][3]	**$1,913,680**	**$2,929,079**
Net Present Value (NPV) [4]	**$3,707,689**	**$9,573,447**

[1] Present worth of annuity based on interest rate of 0.3% and 20 years.
Uniform Series Present Worth (USPW)

[2] Present worth based on PW Factor = (1/(1 + i)t) using interest rate (i) of -0.4% and 20 yrs (t) as obtained from Appendix C - OMB, Circular A-94 (Rev Nov 2020).

[3] Salvage value determined based on life expectancy, converted to present day dollars and subtracted.

[4] NPV = Capital cost (C) - USPW (O&M) - SPPW (PW of salvage value)

TAI Mar 2023

TABLE X
SELECTED PLAN COST SUMMARY
Proposed Wastewater System Improvements
Sweetser, Indiana

Construction and Equipment Subtotal	
Collection System Improvements	$2,507,557
Wastewater Treatment Plant Improvements	$629,000
Regionalization	$1,030,000
Subtotal Capital Costs	$4,166,557
Non-Construction Costs	**Total Cost**
Preliminary Eng Rpt	$43,000
Asset Management Plan	$25,000
Inspection	$124,000
Grant Administration	$56,000
Bond, Rate, Legal	$175,000
Engineering Design	$410,000
Construction Engineering	$20,000
Railroad Permitting	$5,000
Labor Standards	$7,500
NON-Construction Cost Subtotal	**$865,500**
Contingencies (10%)	$416,656
Construction Cost Subtotal	**$4,583,213**
Total Project Cost	**$5,448,713**

TABLE XI
Sweetser, Indiana
PROJECT FINANCING INFORMATION

1.	Project Cost Summary	
	a. Treatment System cost	$ 629,000
	b. Collection System cost	$ 2,507,557
	c. Regionalization cost	$ 1,030,000
	d. Water Supply/Wells	$
	e. Water Storage cost	$
	f. Other: Electrical, Controls	$
	Subtotal Construction Cost	**$ 4,166,557**
	g. Contingencies (should not exceed 10% of const cost)	$ 416,656
	h. Non-construction cost (Engineering, legal & financial services related to the project land costs, start-up costs, const inspection).	$ 865,500
	i. **Total Proposed Project Cost**	**$ 5,448,713**
	j. The following are not SRF Loan Program eligible:	
	Grant Applications &income surveys for other agencies	$ 700,000
	Previously funded SRF components that have not met useful life	$
	Materials and work done on private property	$
	Expenses incurred to form a utility RSD, RWD, Conservancy	$
	Total Ineligible Costs	**$**
	k. Other grant/loan funding sources	
	Other Grants	$
	Cash on hand	$
	Other Loans	$
	Hook-on Fees	$
	l. Total Other Funding Sources	**$**
2.	Requested **SRF Loan Amount (i-l)**	**$ 4,748,713**
3.	Estimated post-project user rate for 4,000 gallons	**$**
4.	Anticipated SRF interest rate	2%

5. Financial Advisor
   a. Firm Contact Steven K Brock
   b. Name Therber Brock & Associates, LLC

6. Bond Counsel
   a. Firm Contact _____
   b. Name _____

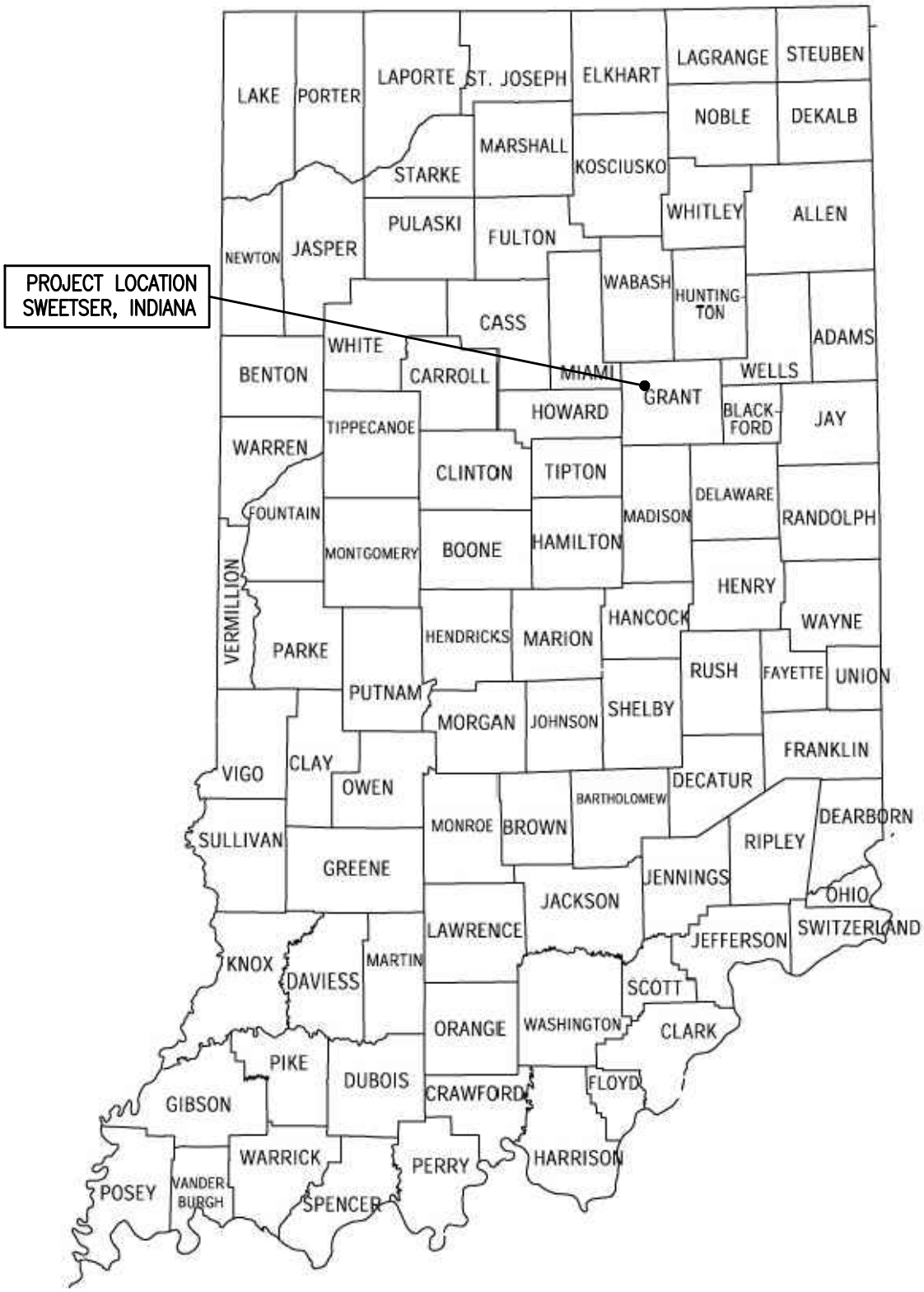

CLIENT: **TOWN OF SWEETSER**	NORTH:	PREPARED BY:	PROJECT NAME: **PER**
SHEET TITLE: **PROJECT LOCATION MAP**	SCALE: **NONE**	TRIAD ASSOCIATES INC.	PROJECT #: **202242A**
			EXHIBIT #: **1**

02/23/2023 3:31pm S:\2022\SWEETSER\202242A – PER\EXHIBIT 1 – PROJECT LOCATION.DWG

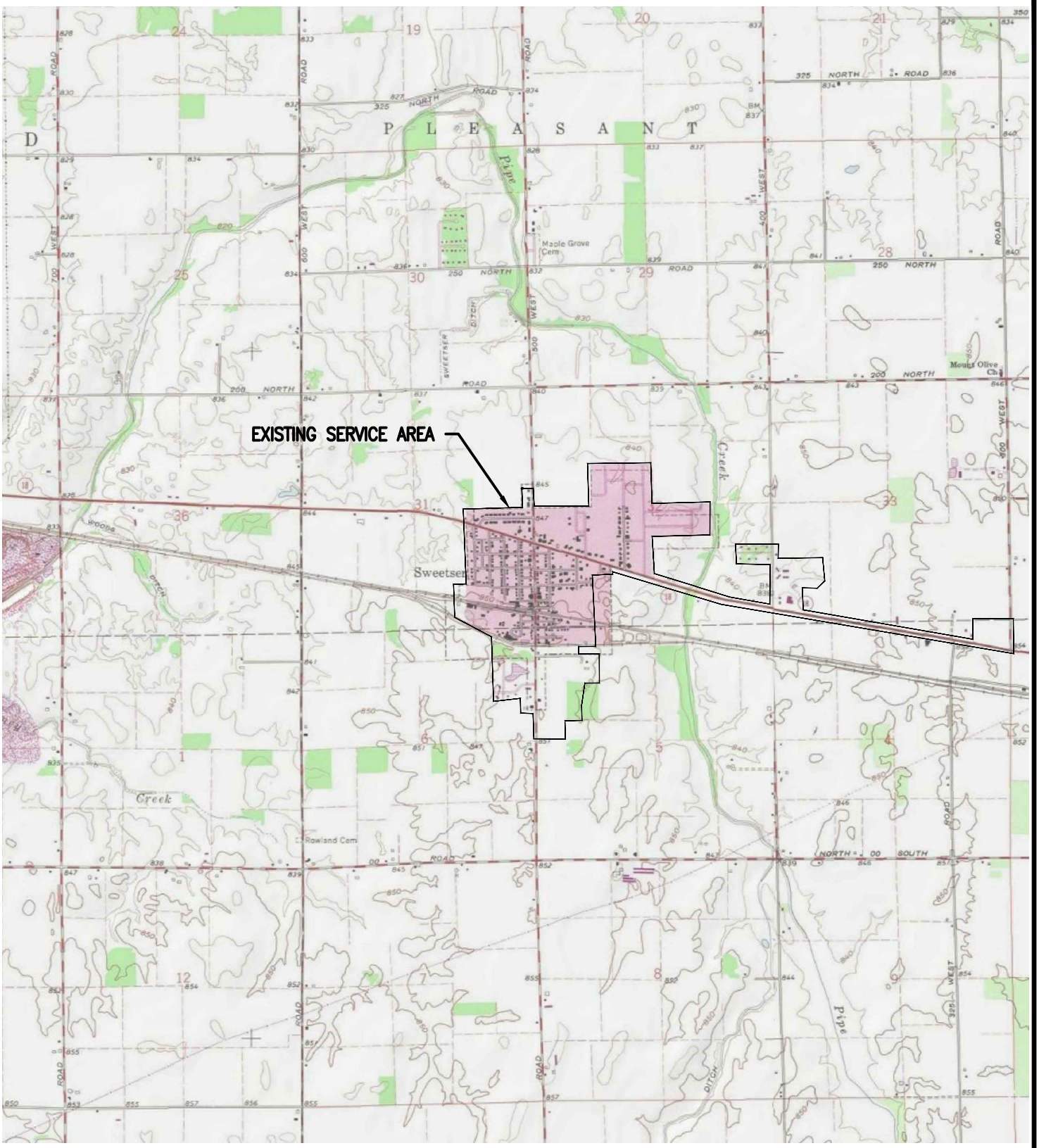

CLIENT:	NORTH:	PREPARED BY:	PROJECT NAME:
TOWN OF SWEETSER			PER
SHEET TITLE: EXISTING SERVICE AREA	SCALE: 1"=3000'-0"	TRIAD ASSOCIATES INC.	PROJECT #: 202242A
			EXHIBIT #: 2

03/23/2023 9:26am S:\2022\SWEETSER\202242A – PER\EXHIBIT 2 – EX SERVICE AREA.DWG

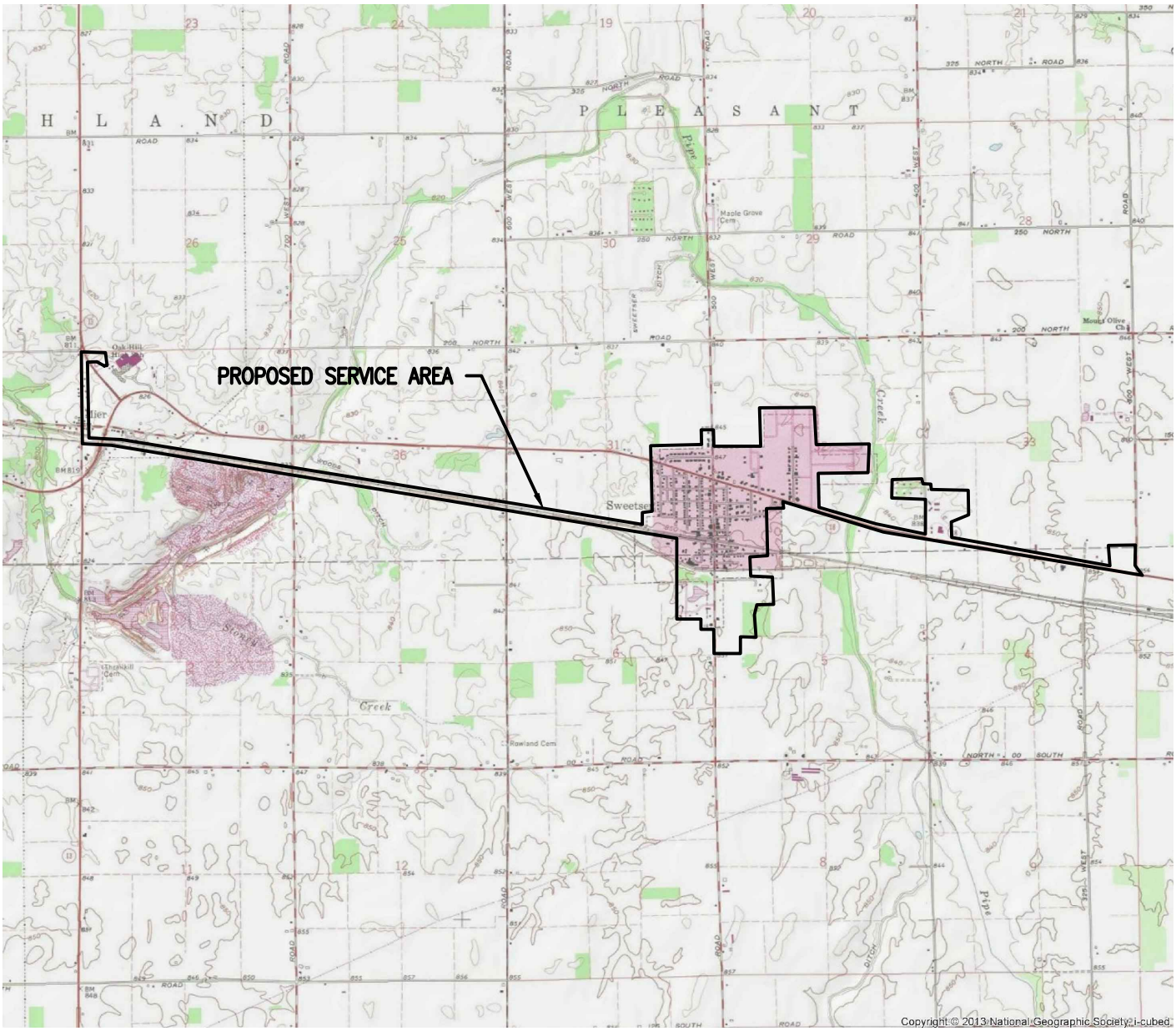

CLIENT: **TOWN OF SWEETSER**	NORTH:	PREPARED BY:	PROJECT NAME: **PER**
SHEET TITLE: **PROPOSED SERVICE AREA**	SCALE: **1"=4000'-0"**	TRIAD ASSOCIATES INC.	PROJECT #: **202242A**
			EXHIBIT #: **3**

03/23/2023 9:27am S:\2022\SWEETSER\202242A – PER\EXHIBIT 3 – PRO SERVICE AREA.DWG

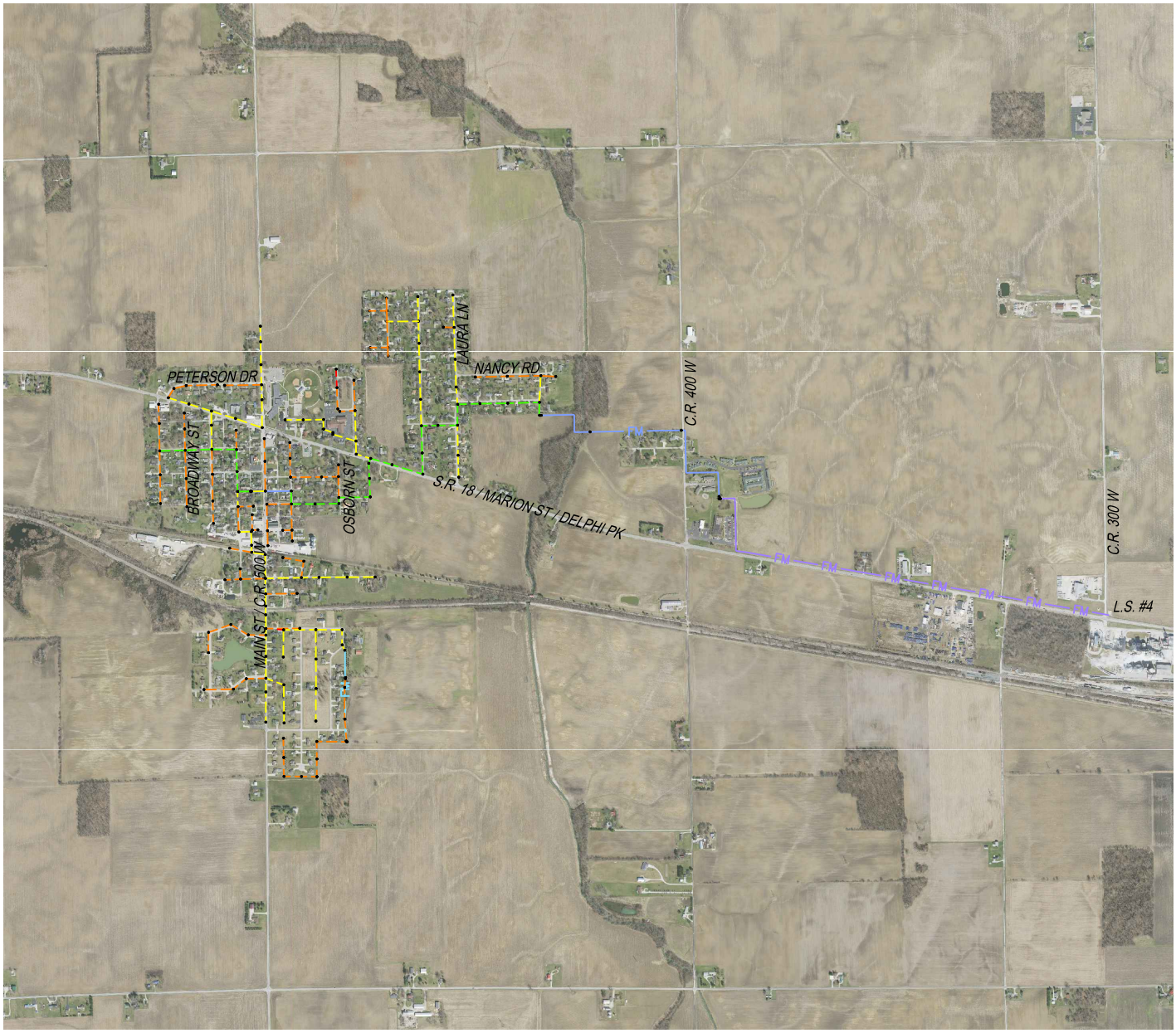

LEGEND:

- - - - - - - - - - - -	SANITARY LINE – 6"
- - - - - - - - - - - -	SANITARY LINE – 8"
- - - - - - - - - - - -	SANITARY LINE – 10"
- - - - - - - - - - - -	SANITARY LINE – 12"
—— FM —— FM —— FM ——	FORCEMAIN – 3"
—— FM —— FM —— FM ——	FORCEMAIN – 6"
—— FM —— FM —— FM ——	FORCEMAIN – 2.5"

CLIENT: **TOWN OF SWEETSER**

SHEET TITLE: **EXISTING WASTEWATER SYSTEM**

NORTH:

SCALE: 1"=2000'-0"

PREPARED BY: TRIAD ASSOCIATES INC.

PROJECT NAME: PER

PROJECT #: 202242A

EXHIBIT #: 4

03/20/2023 2:10pm S:\2022\SWEETSER\202242A – PER\EXHIBIT 4 – EX WW SYSTEM.DWG

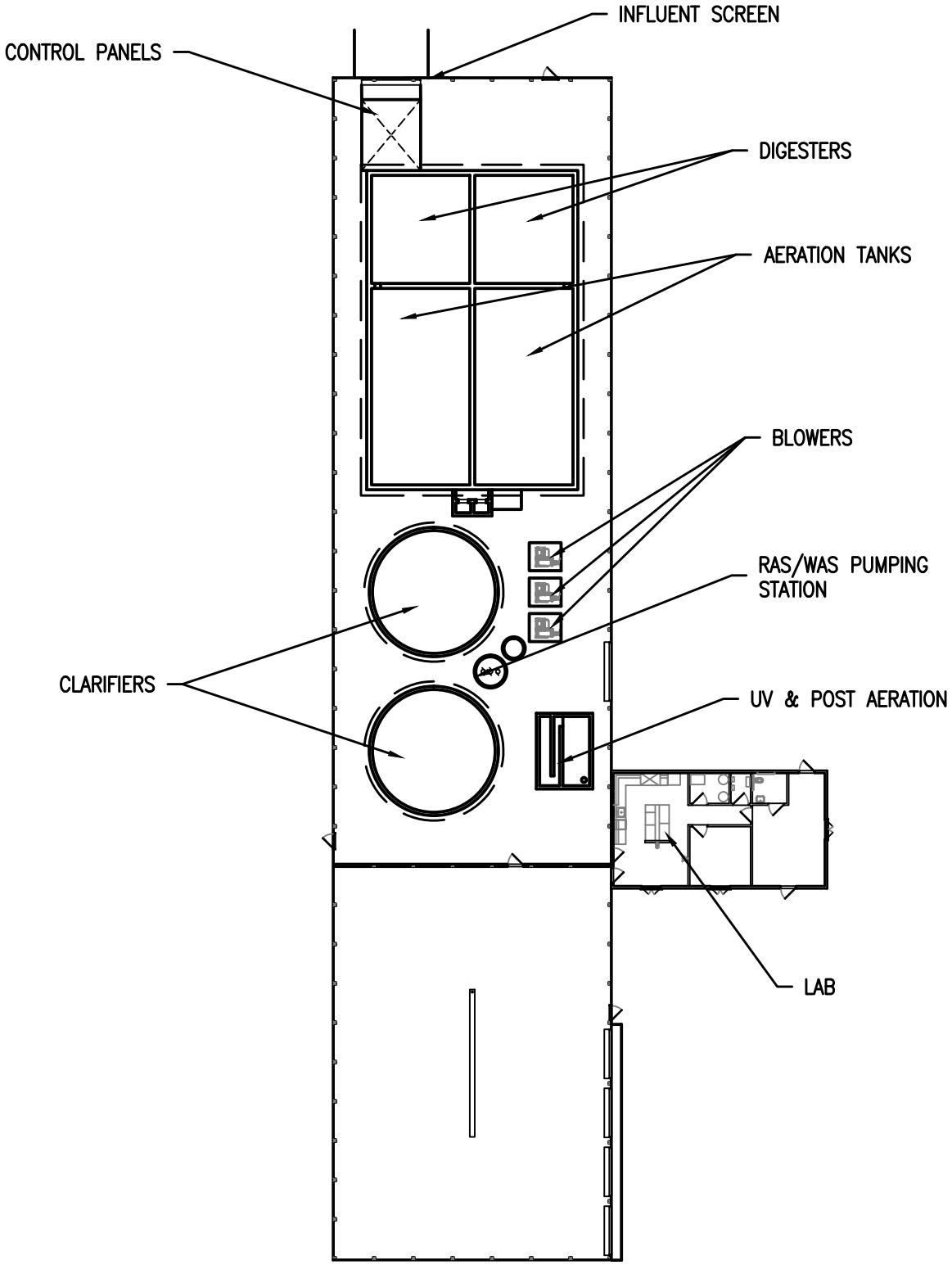

CLIENT: **TOWN OF SWEETSER**	NORTH:	PREPARED BY:	PROJECT NAME: **PER**
SHEET TITLE: **EXISTING WWTP**	SCALE: **1/32"=1'-0"**	TRIAD ASSOCIATES INC.	PROJECT #: **202242A**
			EXHIBIT #: **5**

03/14/2023 11:13am S:\2022\SWEETSER\202242A - PER\EXHIBIT 5 - EXWWTP.DWG

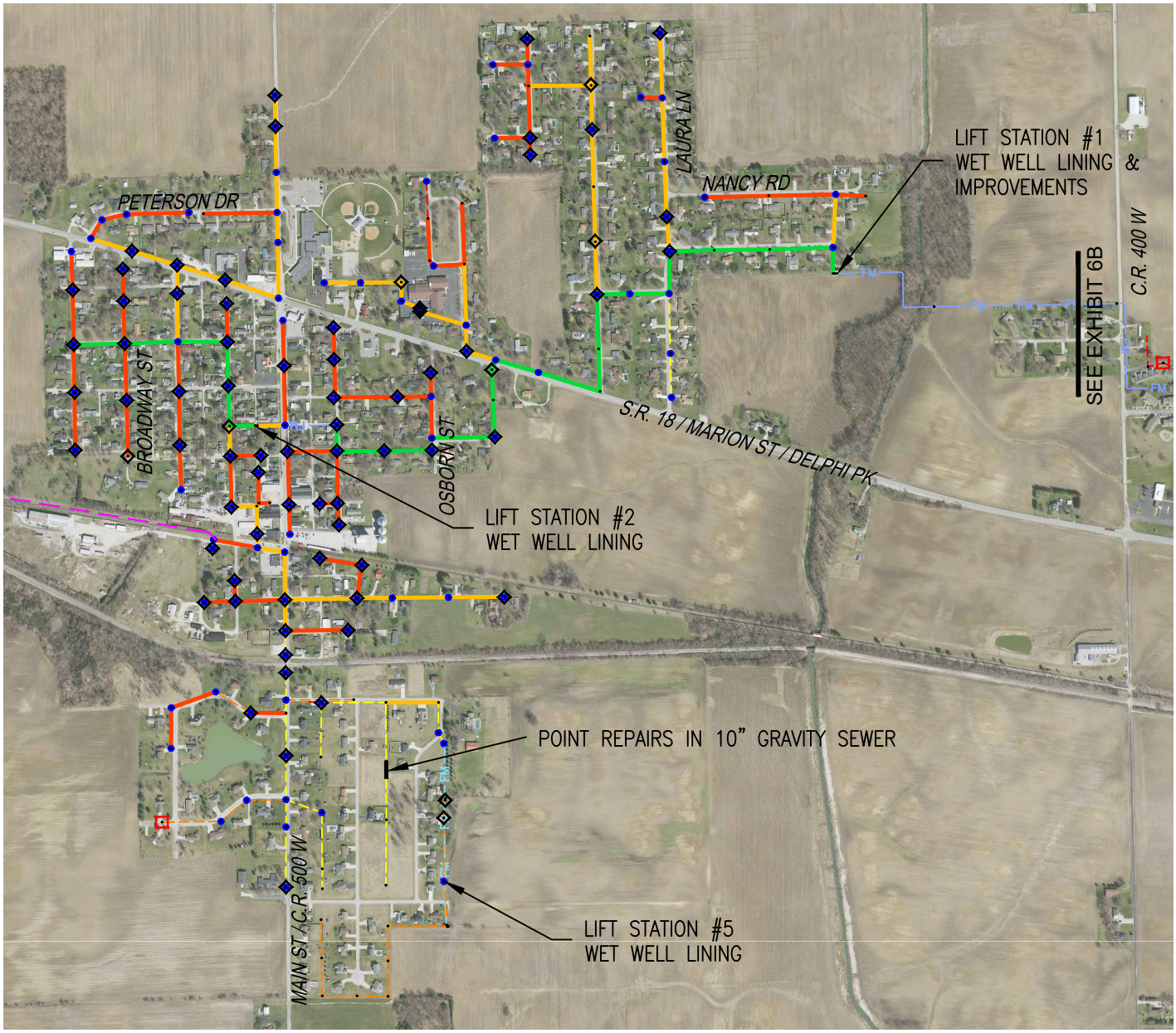

LEGEND:

- SANITARY LINE – UNKNOWN SIZE
- SANITARY LINE – 8"
- SANITARY LINE – 10"
- SANITARY LINE – 12"
- FM — FM — FM — FORCEMAIN – 3"
- FM — FM — FM — FORCEMAIN – 6"
- FM — FM — FM — FORCEMAIN – 2.5"
- NEW MANHOLE LID
- LINE MANHOLE
- REPLACE MANHOLE
- LINE EXISTING 8" SANITARY
- LINE EXISTING 10" SANITARY
- LINE EXISTING 12" SANITARY
- PROPOSED 3" FORCEMAIN

CLIENT: **TOWN OF SWEETSER**

SHEET TITLE: **PROPOSED WASTEWATER SYSTEM IMPROVEMENTS, OPTION A**

NORTH:

SCALE: 1"=1000'-0"

PREPARED BY: TRIAD ASSOCIATES INC.

PROJECT NAME: PER

PROJECT #: 202242A

EXHIBIT #: 6A

03/23/2023 1:27pm S:\2022\SWEETSER\202242A – PER\EXHIBIT 6 – PRO WW SYSTEM OPT A.DWG

LEGEND:

- SANITARY LINE – UNKNOWN SIZE
- SANITARY LINE – 8"
- SANITARY LINE – 10"
- SANITARY LINE – 12"
- FORCEMAIN – 3"
- FORCEMAIN – 6"
- FORCEMAIN – 2.5"
- NEW MANHOLE LID
- LINE MANHOLE
- REPLACE MANHOLE
- PROPOSED 3" FORCEMAIN

CLIENT: **TOWN OF SWEETSER**	NORTH:	PREPARED BY:	PROJECT NAME: **PER**
SHEET TITLE: **PROPOSED WASTEWATER SYSTEM IMPROVEMENTS, OPTION A**	SCALE: **1"=1000'-0"**	TRIAD ASSOCIATES INC.	PROJECT #: **202242A**
			EXHIBIT #: **6B**

03/23/2023 1:28pm S:\2022\SWEETSER\202242A – PER\EXHIBIT 6 – PRO WW SYSTEM OPT A.DWG

LEGEND:

- SANITARY LINE – UNKNOWN SIZE
- SANITARY LINE – 8"
- SANITARY LINE – 10"
- SANITARY LINE – 12"
- FM — FM — FM — FORCEMAIN – 3"
- FM — FM — FM — FORCEMAIN – 6"
- FM — FM — FM — FORCEMAIN – 2.5"
- NEW MANHOLE LID
- LINE MANHOLE
- REPLACE MANHOLE
- PROPOSED 1.5" FORCEMAIN
- PROPOSED 3" FORCEMAIN

CLIENT: TOWN OF SWEETSER	NORTH:	PREPARED BY:	PROJECT NAME: PER
SHEET TITLE: PROPOSED WASTEWATER SYSTEM IMPROVEMENTS, OPTION A	SCALE: 1"=1000'-0"	TRIAD ASSOCIATES INC.	PROJECT #: 202242A
			EXHIBIT #: 6C

03/23/2023 9:52am S:\2022\SWEETSER\202242A – PER\EXHIBIT 6 – PRO WW SYSTEM OPT A.DWG

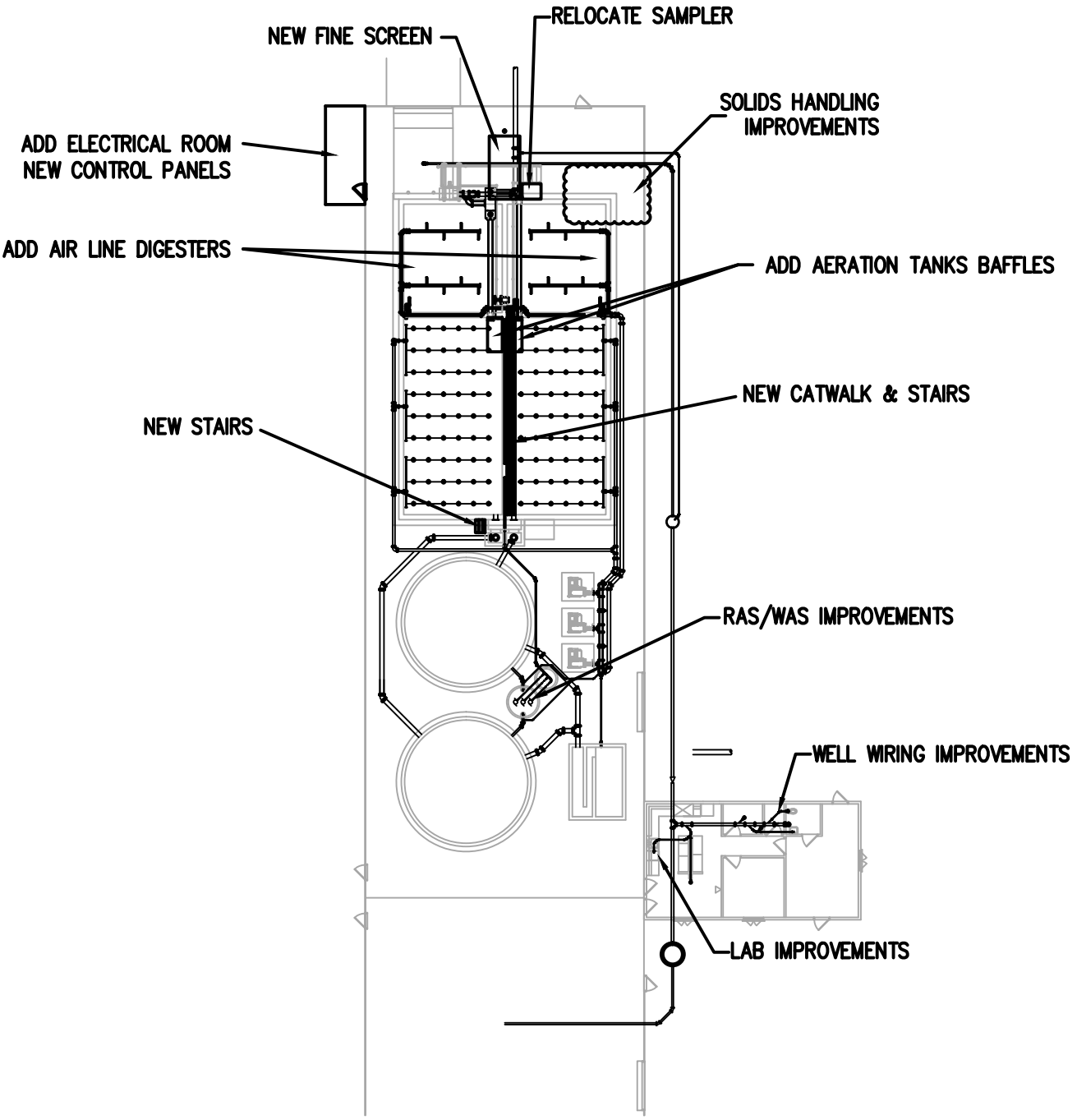

CLIENT: **TOWN OF SWEETSER**	NORTH:	PREPARED BY:	PROJECT NAME: **PER**
SHEET TITLE: **PROPOSED WWTP IMPROVEMENTS**	SCALE: **1/32"=1'-0"**	TRIAD ASSOCIATES INC.	PROJECT #: **202242A**
			EXHIBIT #: **7**

03/23/2023 9:25am S:\2022\SWEETSER\202242A - PER\EXHIBIT 7 - PROPOSED WWTP.DWG

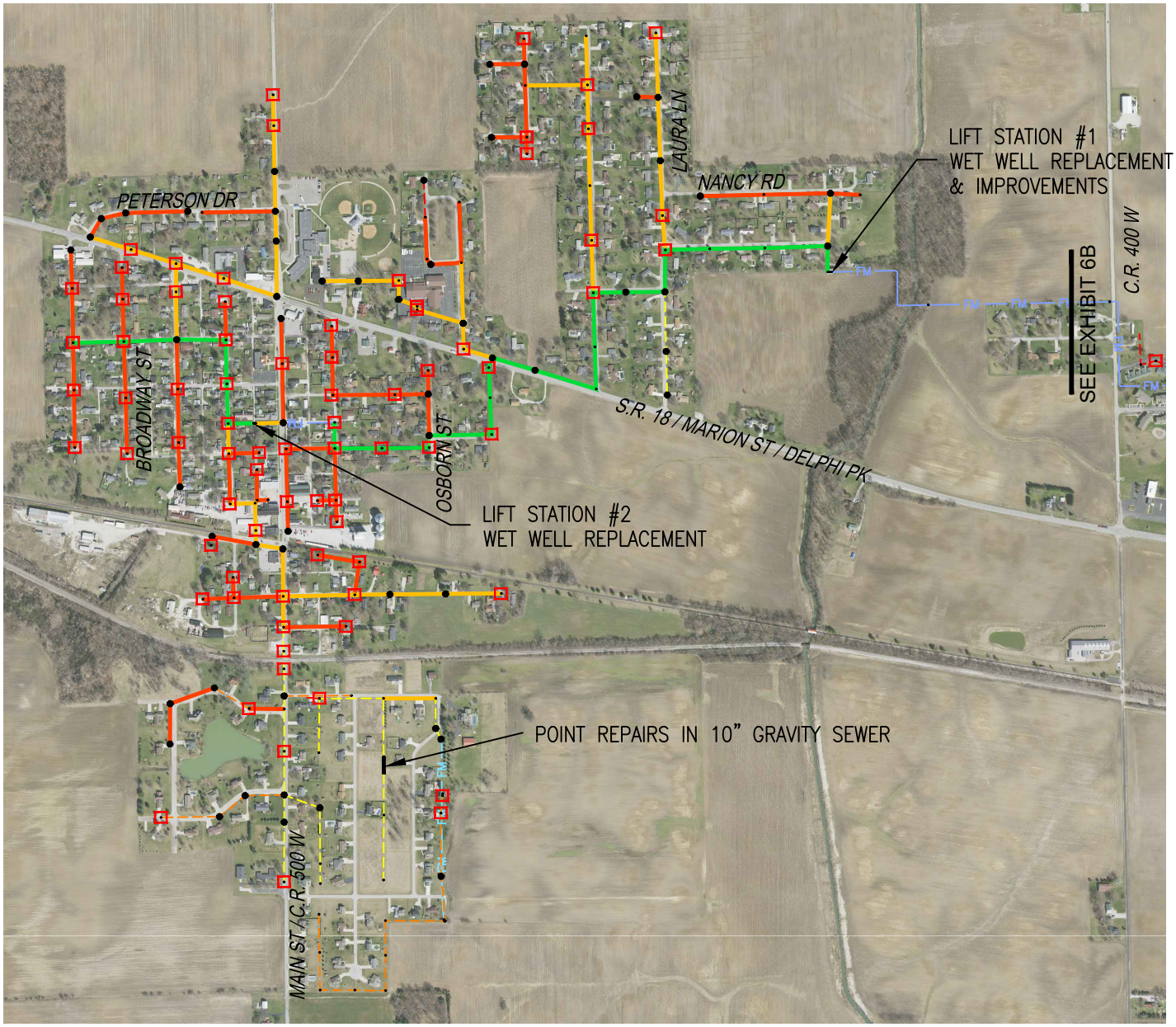

LEGEND:

- SANITARY LINE – UNKNOWN SIZE
- SANITARY LINE – 8"
- SANITARY LINE – 10"
- SANITARY LINE – 12"
- FM — FORCEMAIN – 3"
- FM — FORCEMAIN – 6"
- FM — FORCEMAIN – 2.5"
- NEW MANHOLE LID
- REPLACE MANHOLE
- REPLACE 8" SANITARY
- REPLACE 10" SANITARY
- REPLACE 12" SANITARY

CLIENT: TOWN OF SWEETSER	NORTH:	PREPARED BY:	PROJECT NAME: PER
SHEET TITLE: PROPOSED WASTEWATER SYSTEM IMPROVEMENTS, OPTION B	SCALE: 1"=1000'-0"	TRIAD ASSOCIATES INC.	PROJECT #: 202242A
			EXHIBIT #: 8A

03/23/2023 9:19am S:\2022\SWEETSER\202242A – PER\EXHIBIT 8 – PRO WW SYSTEM OPT B.DWG

LEGEND:

- SANITARY LINE – 6"
- SANITARY LINE – 8"
- SANITARY LINE – 10"
- SANITARY LINE – 12"
- FM — FM — FM — FORCEMAIN – 3"
- FM — FM — FM — FORCEMAIN – 6"
- FM — FM — FM — FORCEMAIN – 2.5"
- NEW MANHOLE LID
- REPLACE MANHOLE
- REPLACE 8" SANITARY
- REPLACE 10" SANITARY
- REPLACE 12" SANITARY

CLIENT: TOWN OF SWEETSER	NORTH:	PREPARED BY:	PROJECT NAME: PER
SHEET TITLE: PROPOSED WASTEWATER SYSTEM IMPROVEMENTS, OPTION B	SCALE: 1"=1000'-0"	TRIAD ASSOCIATES INC.	PROJECT #: 202242A
			EXHIBIT #: 8B

03/23/2023 9:19am S:\2022\SWEETSER\202242A – PER\EXHIBIT 8 – PRO WW SYSTEM OPT B.DWG

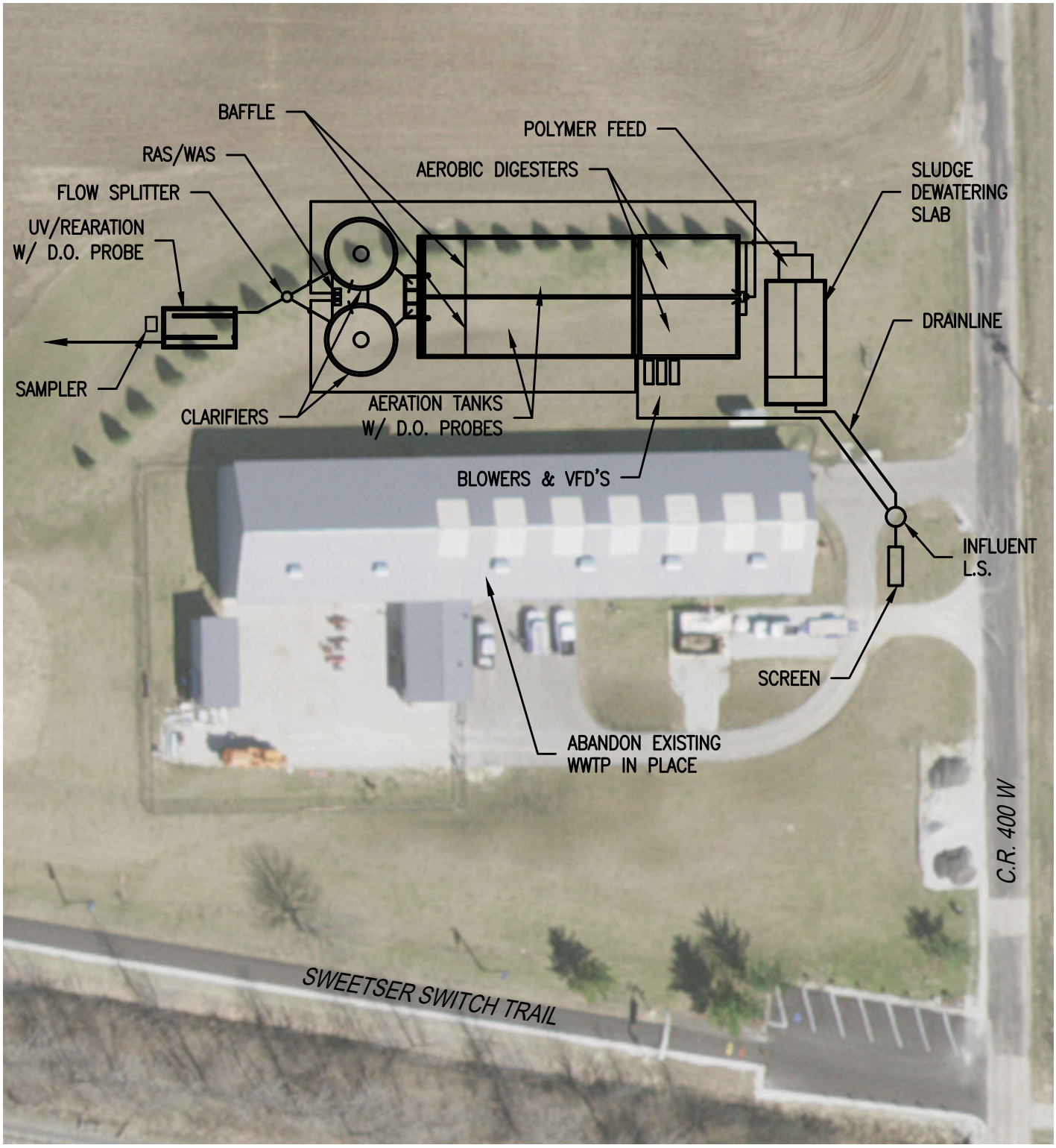

CLIENT: **TOWN OF SWEETSER**	NORTH:	PREPARED BY:	PROJECT NAME: PER
SHEET TITLE: **PROPOSED WWTP IMPROVEMENTS**	SCALE: 1"=60'-0"	TRIAD ASSOCIATES INC.	PROJECT #: 202242A
			EXHIBIT #: 9

03/21/2023 1:38pm S:\2022\SWEETSER\202242A - PER\EXHIBIT 9 - PRO WWTP.DWG

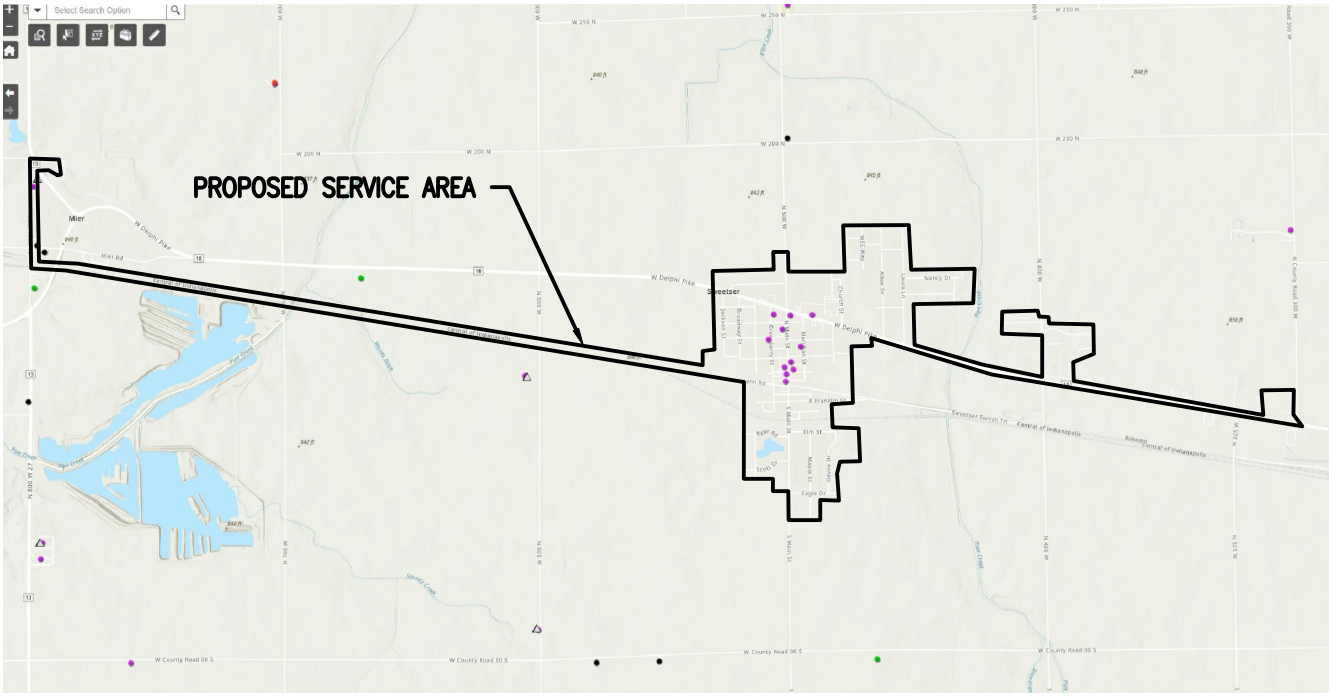

Legend

- Cemeteries
- National Register Sites
- National Register Historic Districts

County Survey Sites	Historic Bridges
Outstanding	Outstanding
Notable	Notable
Contributing	Contributing
Non-Contributing	Non-Contributing
Demolished	Demolished
Unknown	Unknown

CLIENT: **TOWN OF SWEETSER**	NORTH:	PREPARED BY:	PROJECT NAME: **PER**
SHEET TITLE: **SHAARD MAP**	SCALE: **1"=4000'-0"**	TRIAD ASSOCIATES INC.	PROJECT #: **202242A**
			EXHIBIT #: **10**

03/28/2023 2:56pm S:\2022\SWEETSER\202242A – PER\EXHIBIT 10 – HISTORICSITES.DWG

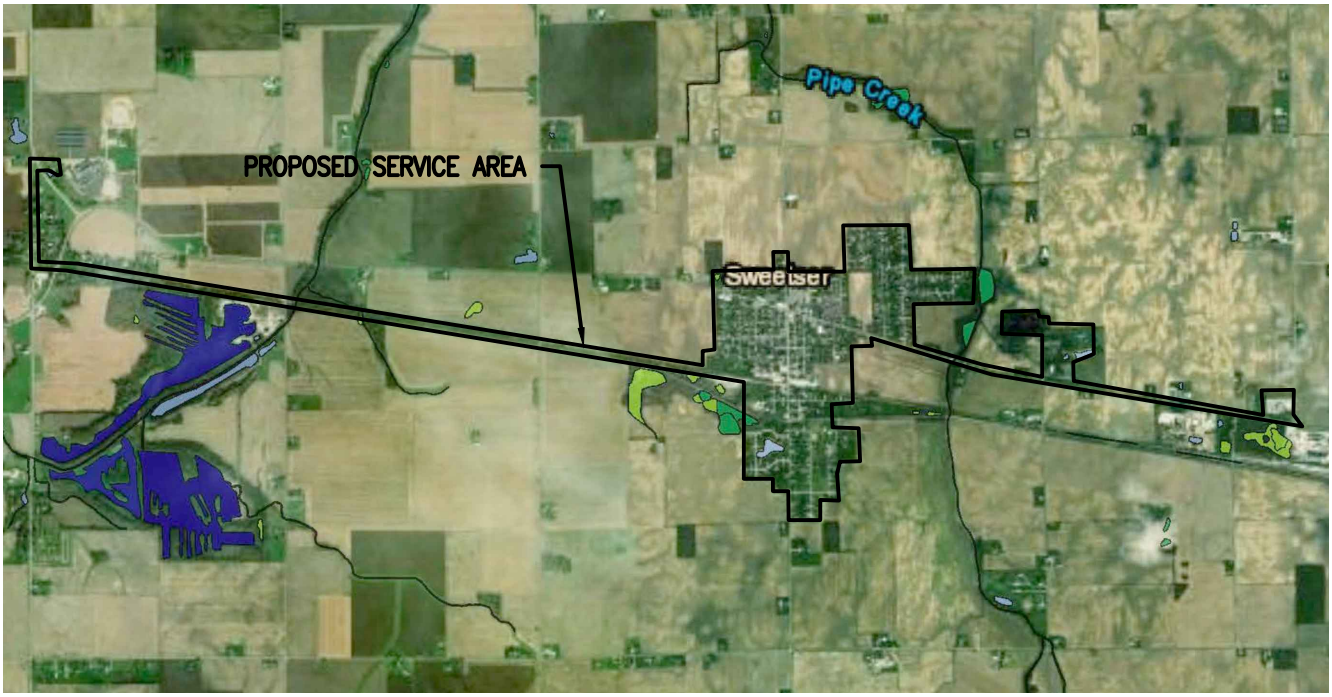

March 3, 2023

Wetlands

- Estuarine and Marine Deepwater
- Estuarine and Marine Wetland
- Freshwater Emergent Wetland
- Freshwater Forested/Shrub Wetland
- Freshwater Pond
- Lake
- Other
- Riverine

This map is for general reference only. The US Fish and Wildlife Service is not responsible for the accuracy or currentness of the base data shown on this map. All wetlands related data should be used in accordance with the layer metadata found on the Wetlands Mapper web site.

National Wetlands Inventory (NWI)
This page was produced by the NWI mapper

03/23/2023 10:39am S:\2022\SWEETSER\202242A - PER\EXHIBIT 11 - WETLANDS.DWG

CLIENT: **TOWN OF SWEETSER**	NORTH:	PREPARED BY:	PROJECT NAME: **PER**
SHEET TITLE: **WETLANDS MAP**	SCALE: **1"=4000'-0"**	TRIAD ASSOCIATES INC.	PROJECT #: **202242A**
			EXHIBIT #: **11**

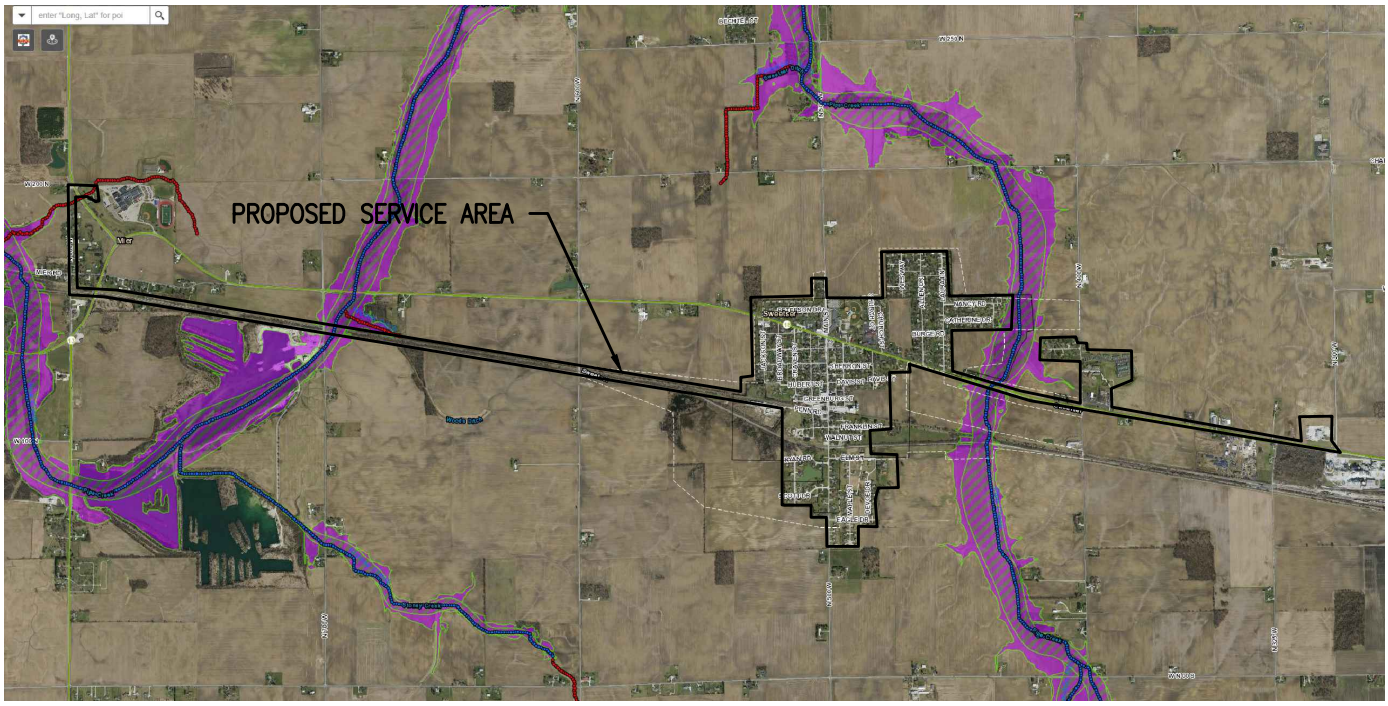

Legend

Local Flood Plain Administrator Jurisdiction

FLOOD_FEPs - Flood Elevation Points

- 1.0
- 1.5
- 1.75
- 2.0

Drainage Areas for Indiana NHD Flowlines

Rivers and Streams at least 1 square mile

- 1 - 10
- 10 - 100
- 100 - 500
- > 500

Best Available Flood Hazard Layer (BAFL)

Best Available Flood Hazard Layer

- FEMA Zone AE Floodway; FEMA Administrative Floodway; AE, NFHL, RIVERINE FLOODWAY SHOWN IN COASTAL ZONE
- DNR Detailed Floodway
- DNR Approximate Floodway
- FEMA Zone A
- FEMA Zone AE; AE, NFHL, COASTAL FLOODPLAIN; AE, NFHL, COMBINED RIVERINE AND COASTAL FLOODPLAIN; AE, NFHL, Coastal Floodplain
- VE, NFHL, Coastal Floodplain; VE, NFHL, <Null>
- DNR Detailed Fringe
- DNR Approximate Fringe
- Additional Floodplain Area; DNR .2 Percent Flood Hazard; X, NFHL, 0.2 PCT ANNUAL CHANCE FLOOD HAZARD IN COASTAL ZONE; X, IDNR_MR, AREA OF MINIMAL FLOOD HAZARD
- FEMA Protected by Levee
- FEMA Floodplain - Ponding (Depth)
- FEMA Floodplain - Sheet Flow (Depth); AO, IDNR_MR, DNR APPROVED STUDY
- Not Mapped

CLIENT: **TOWN OF SWEETSER**	NORTH:	PREPARED BY:	PROJECT NAME: **PER**
SHEET TITLE: **FLOODWAY MAP**	SCALE: **1"=4000'-0"**	TRIAD ASSOCIATES INC.	PROJECT #: **202242A**
			EXHIBIT #: **12**

03/14/2023 11:35am S:\2022\SWEETSER\202242A – PER\EXHIBIT 12 – FLOOD.DWG

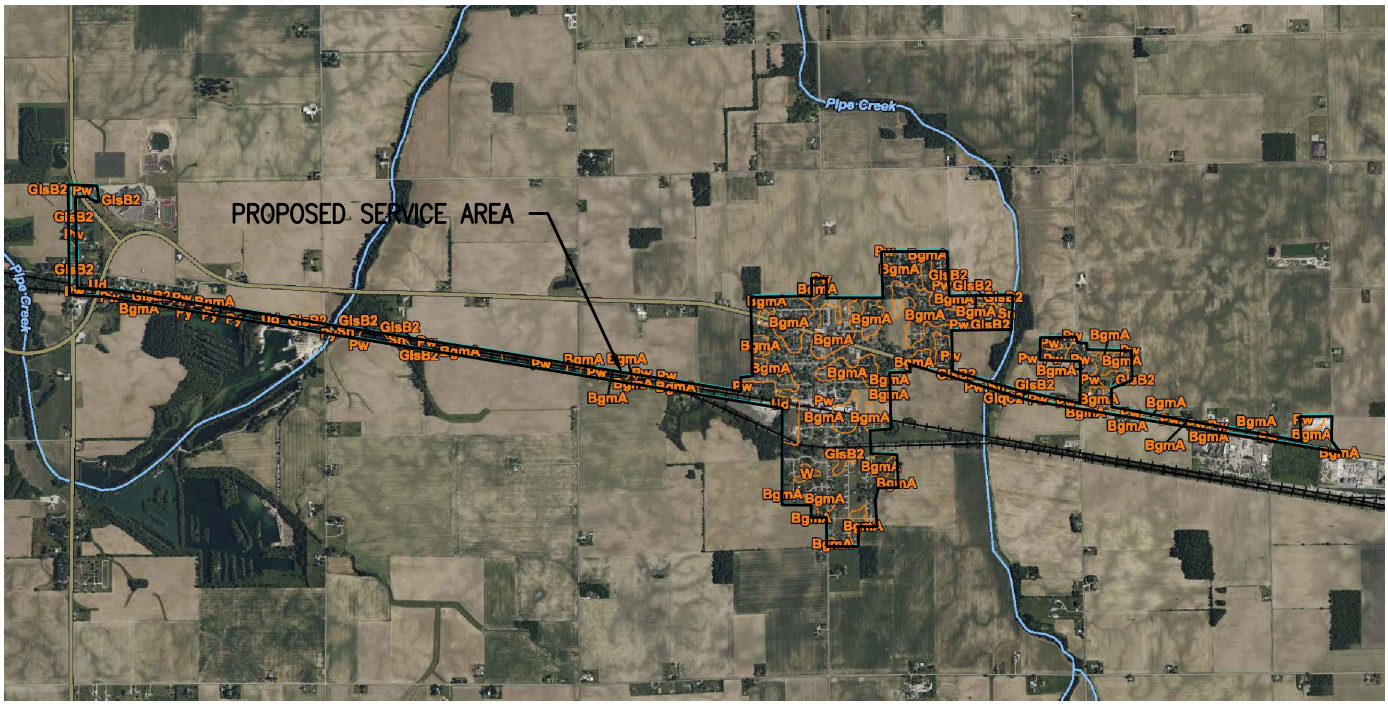

Soil Map—Grant County, Indiana

MAP LEGEND

Area of Interest (AOI)
- Area of Interest (AOI)

Soils
- Soil Map Unit Polygons
- Soil Map Unit Lines
- Soil Map Unit Points

Special Point Features
- Blowout
- Borrow Pit
- Clay Spot
- Closed Depression
- Gravel Pit
- Gravelly Spot
- Landfill
- Lava Flow
- Marsh or swamp
- Mine or Quarry
- Miscellaneous Water
- Perennial Water
- Rock Outcrop
- Saline Spot
- Sandy Spot
- Severely Eroded Spot
- Sinkhole
- Slide or Slip
- Sodic Spot
- Spoil Area
- Stony Spot
- Very Stony Spot
- Wet Spot
- Other
- Special Line Features

Water Features
- Streams and Canals

Transportation
- Rails
- Interstate Highways
- US Routes
- Major Roads
- Local Roads

Background
- Aerial Photography

MAP INFORMATION

The soil surveys that comprise your AOI were mapped at 1:15,800.

Please rely on the bar scale on each map sheet for map measurements.

Source of Map: Natural Resources Conservation Service
Web Soil Survey URL:
Coordinate System: Web Mercator (EPSG:3857)

Maps from the Web Soil Survey are based on the Web Mercator projection, which preserves direction and shape but distorts distance and area. A projection that preserves area, such as the Albers equal-area conic projection, should be used if more accurate calculations of distance or area are required.

This product is generated from the USDA-NRCS certified data as of the version date(s) listed below.

Soil Survey Area: Grant County, Indiana
Survey Area Data: Version 30, Sep 3, 2022

Soil map units are labeled (as space allows) for map scales 1:50,000 or larger.

Date(s) aerial images were photographed: Jun 16, 2022—Jun 21, 2022

The orthophoto or other base map on which the soil lines were compiled and digitized probably differs from the background imagery displayed on these maps. As a result, some minor shifting of map unit boundaries may be evident.

03/14/2023 11:41am S:\2022\SWEETSER\202242A – PER\EXHIBIT 13 – SOILS.DWG

CLIENT: TOWN OF SWEETSER	NORTH:	PREPARED BY:	PROJECT NAME: PER
SHEET TITLE: SOILS MAP	SCALE: 1"=4000'-0"	TRIAD ASSOCIATES INC.	PROJECT #: 202242A
			EXHIBIT #: 13

APPENDIX A – DESIGN SUMMARY

Preliminary Design Summary

Town of Sweetser, Indiana

I. General

1. Applicant: Town of Sweetser WWTP, Indiana
2. Project Name: Wastewater System Improvements
3. Location: Sweetser, Indiana; Grant County
4. Engineer: Triad Associates, Inc.
5. NPDES Permit Number: IN0064165
   A. Date of final Permit Issuance: January 1, 2019
   B. Expiration Date: December 31, 2023
6. Remarks:
   A. Description of Present Situation:
   The existing WWTP is a 150,000 gpd single stage nitrification activated sludge plant that receives I/I flows that exceed the plant design capacity.

   B. Description of Proposed Facilities:
   The project will include replacing plant influent screen, solids handling improvements, electrical room, RAS/WAS improvements, aeration tank baffles, digester air lines, laboratory improvements, etc. The project will also install catwalk and stairs for aeration tanks and digesters and repair drinking water well wiring of the plant. Existing collection system will also be improved including lift station improvements and collection system lining and point repairs to reduce I/I.

   C. Inspection during construction to be provided by: Triad Associates, Inc.

7. Estimated Project Costs:
   A. Total Cost: $ 5,430,563
   B. Source of Funding: SRF

8. Certification Seal of Engineer:

KUN LIU
REGISTERED
No. 12000689
STATE OF
INDIANA
PROFESSIONAL ENGINEER

II. Design Data

1. Current Population: 1,066
2. Design Year and population: Design Year 2040, 1,097
3. Design Population Equivalent: 1,100
4. Design Flow: 0.15 MGD
   - A. Domestic: 0.1023 MGD
   - B. Industrial/Commercial: 0.015 MGD
   - C. Infiltration/Inflow: 0.0327 MGD
5. Maximum Plant Flow Capacity: 0.52 MGD
6. Design Waste Strength:
   - A. $CBOD_5$ 215 mg/l
   - B. TSS 200 mg/l
   - C. NH3-N 35 mg/l
   - D. P 5 mg/l
   - E. Other N/A
7. NPDES Permit Limitation on Effluent Quality (Current Permit)

A. CBOD5		12.5 mg/l monthly	18.8 mg/l weekly
B. TSS		15 mg/l monthly	22.5 mg/l weekly
C. NH3-N	S	1.3 mg/l monthly avg	1.9 mg/l weekly avg
	W	2.0 mg/l monthly avg	3.0 mg/l weekly avg
D. Phosphorus		1.0 mg/l monthly avg	

E. Chlorine Residual(final) NA

F. pH (s.u.) Daily Min 6.0 Daily Max 9.0

G. D.O. (daily minimum) 6.0 mg/l

H. E. Coli 235 daily max 125 monthly avg.

9. Receiving Stream:
   A. Name: Pipe Creek
   B. Tributary To: Wabash River
   C. Stream Uses: Drainage, Recreational
   D. 7-day, 1 in 10 year low flow: 46.0 cfs

III. Treatment Units

A. Plant Influent Lift Station NA

B. Flow Meter Existing

1. Type: mag meter
2. Location: influent pipe before influent screen
3. Indicating, recording and totalizing: Yes

C. Headworks Proposed

1. Type: Automatic Bar screen
2. Maximum Capacity: 0.52 MGD
3. Bypass (overflow) Bar Screen: Bypass Barscreen
4. Location: Plant Headworks before aeration tank

D. Activated Sludge Existing

1. Type of Activated Sludge Process: single stage nitrification
2. Number and Size of Units:

   2 @ 151, 890 gal total
3. Detention Time (hours): 24
4. Organic Loading (lbs. BOD5 /1000 c.f.): 4.4
5. Type of Aeration Equipment: fine bubble diffusers
6. Type/size of Blowers: Centrifugal, 3 @ 325 cfm
7. Air Required: 330 cfm for aeration; 320 cfm for digester; miscellaneous 30 cfm
8. Number and capacity of return sludge pumps: 2 @ 100 gpm with 1 spare
9. Method of return sludge rate control: Manual Weir & Pump Throttling
10. Return sludge rate as % of design flow: 50%-150%

11. Provisions for return rate metering: Yes – Manual Weir
12. Location of return sludge discharge: Aeration
13. Facilities to isolate units: Yes
14. Facilities for flow split control: Yes

E. Secondary Clarifiers Existing

1. Type of Clarifiers: Circular
2. Number and Size of Units: 2 @ 25' diameter
3. Surface Settling Rate (gpd/sf):
   a. at the average design flow: 152.8 gpd/s.f.
   b. at the influent pumping rate: 881.1 gpd/sf.
   c. at max daily flow: 1000 gpd/s.f.
4. Detention Time @ DAF: 16.4 hrs
5. Weir Overflow Rate: 5,985 gpd/l.f. @ DAF
6. Type of sludge removal mechanism: Mechanical Scraper
7. Disposal of scum: Digester
8. Facilities for unit isolation: Yes
9. Facilities for flow split control: Yes

F. Post- Aeration Existing

1. Type of Aeration: Fine Bubble Diffused Air
2. Number of Units: 1
3. Size of Units: 890 gallon
4. Aeration Provided: 30 cfm max

G. Nitrification System Existing

1. Type of Nitrification System: Sigle Stage Activated Sludge
2. Ammonia Loading: 43.8 lbs./day
3. Additional Oxygen Demand: 201.4 lb O_2/lb BOD_5 at maximum flow
4. Air Supply System: Fine Bubble Diffuser
5. Hydraulic Detention Time: 24 hrs

6. Mean Cell Residence Time (days): 16.5

H. Phosphorus Removal Facilities: Existing

1. Type of Chemical to be used: Aluminum Sulfate
2. Location of chemical injection: aeration tank effluent
3. Number and size of chemical feed pumps: 2 @ 3.4 gpd
4. Chemical storage: 200-gal polyethylene tank
5. Capacity of secondary containment: Yes

I. Disinfection, UV Existing

1. Type: Horizontal lamps, open channel
2. Location: Effluent channel
3. Size of channel: 18" W x 15.75" D x 71" L
4. Contact time: 8.7 sec at peak flow
5. Dosage: > 30,000 uWS/cm^2 after 9,000 hrs of system operation with lamp Output at 65% of its initial level
6. Bypass: No
7. Intensity monitoring: Yes

J. Aerobic Digester Existing

1. Number and Size of Units: 2 @ 79,822 gals total
2. Detention Time (days): 153 days
3. Organic Loading: 124.3 lb VSS/1000 cf
4. Air Supply: 320 cfm Diffused Air
5. Decanting Method: Air Lift

K. Sludge Drying Beds NA

1. Number and Size of Drying Beds:
2. Filter Area per Capita:
3. Under-Drain System:
4. Discharge location of filtrate:

5. Accessibility of dry sludge removal equipment:

L. Sludge Disposal Existing

1. Ultimate disposal Method of Sludge: Contact Haul
2. Expected Solids Content of Sludge: 3%
3. Location of Disposal Sites: Contact Haul
4. Ownership of Disposal Sites: Contact Haul
5. Availability of Sludge Transport Equipment: Contact Haul

IV. Sewer Collection System

A. Sanitary Sewer: Proposed Section Rehabilitation

1. Type of Sewer Material: Clay, PVC
2. Diameter and Length of Sewer: 14,449' @ 8" Clay Existing to be lined
   14,524' @ 10" Clay Existing to be lined
   6,589' @ 12" Clay Existing to be lined
   641' @ 8" PVC Existing to be lined
   560' @ 10" PVC Existing to be lined
3. Stream, Highway, and Railroad Crossing: N/A
4. Separation of Combined Sewer or New Sewer: NA
5. Number of Manholes: 65 Existing to be lined
   5 Existing to be replaced

B. Lift Station: Proposed Rehabilitation

1. Location: Lift Station #1 Wet Well Lining
   Lift Station #2 Wet Well Lining
   Lift Station #3 Wet Well Lining
   Lift Station #4 Wet Well Replacement
2. Type of Pump: All Submersible; #4 grinder pumps
3. Number of Pumps: Two each station
4. Constant or Variable Speed: LS #1 Variable; Others Constant
5. Capacity of Pumps: 500 gpm; 200 gpm; 100 gpm; 35 gpm

6. A gate valve and check valve in the discharge line: Yes

7. A gate valve on the suction line: NA

8. Ventilation: NA

9. Standby Power: NA

10. Alarm: Yes

11. Breakwater Tanks: NA

12. Bypass or Overflow: NA

13. Type of Force Main: DI; DI; DI; PVC

14. Diameter and Length of Force Main: 6" @ 3,248'; 6"@ 503' ; 3" @ 1,140 (LS#1 and LS#3 share a common 10" discharge); 2.5" @ 5,699

V. Miscellaneous

A. Laboratory Equipment: Proposed to be upgraded

B. Safety Equipment: Existing

C. Plant Site Fence: NA

D. Handrail for tanks: NA

E. Bypasses: None

F. Relationship to Flood Elevation: Above

G. Provisions to maintain the same degree of treatment during construction: Yes

H. Standby Power Equipment: Yes

I. Site Inspection: Yes

APPENDIX B – NRCS CORRESPONDENCE

TRIAD ASSOCIATES, INC.
ENGINEERING • ARCHITECTURE
5835 LAWTON LOOP EAST DRIVE, INDIANAPOLIS, IN 46216-1064
TELEPHONE: (317) 377-5230
FAX: (317) 377-5241
WEBSITE: www.triadassoc.net • E-MAIL: triad@triadassoc.net

February 27, 2023

Mr. Dan Hovland, State Conservationist
Natural Resources Conservation Service
6013 Lakeside Boulevard
Indianapolis, Indiana 46278

Re: Farmland Conversion Impact Rating, Town of Sweetser, Wastewater System Improvements

Dear Mr. Hovland:

Attached is Form AD-1006, Farmland Conversion Impact Rating, which needs to be completed for a wastewater system improvements project proposed for the Town of Sweetser, Indiana. Funding for the project will be through the Indiana State Revolving Fund (SRF) Loan program. Completion of this form is required as part of the review process by the Indiana Department of Environmental Management (IDEM).

The proposed project will make needed improvements and upgrades to the sewer system. The Town of Sweetser is located in Franklin, Pleasant and Richland townships, Grant County, Indiana in Sections 31, 32 and 5, 6 of Township 25 North, Range 7 East, 24 North, Range 7 East and can be found on the Sweetser Quadrangle map. Activities related to the proposed improvements will occur in rights of way and easements within the Town. Enclosed are USGS, aerial, and soil maps showing the project location and proposed construction.

Triad Associates Inc. is the consulting firm representing the Town and preparing the Preliminary Engineering Report for submittal to IDEM. Correspondence should be directed to our office. Please contact me at **(317) 377-5230** or **kliu@triadassoc.net** if additional information is needed. Thank you for your assistance.

Sincerely,

Kun Liu, Ph.D., P.E.
TRIAD ASSOCIATES, INC.
Engineering * Architecture

Enclosures

United States Department of Agriculture

Farm Production and Conservation

Natural Resources Conservation Service

Indiana State Office
6013 Lakeside Boulevard
Indianapolis, Indiana 46278
317-295-5800

March 31, 2023

Kun Liu, Ph.D., P.E.
Triad Associates, Incorporated
5835 Lawton Loop East Drive
Indianapolis, Indiana 46216

Dear Mr. Liu:

The proposed Sweetser Wastewater Improvements project in the Town of Sweetser, Grant County, Indiana as referred to in your letter received March 30, 2023, will not cause a conversion of prime farmland.

If you need additional information, please contact John Allen at 317-295-5859 or john.allen@usda.gov.

Sincerely,

JOHN ALLEN
State Soil Scientist

Enclosure

USDA is an equal opportunity provider, employer, and lender.

U.S. Department of Agriculture

FARMLAND CONVERSION IMPACT RATING

PART I *(To be completed by Federal Agency)*	Date Of Land Evaluation Request 02/28/2023
Name of Project Sweetser Wastewater Improvements	Federal Agency Involved Town of Sweetser, IDEM
Proposed Land Use Sewer Collection	County and State Grant County, Indiana
PART II *(To be completed by NRCS)*	Date Request Received By NRCS / Person Completing Form: JRA

Does the site contain Prime, Unique, Statewide or Local Important Farmland? *(If no, the FPPA does not apply - do not complete additional parts of this form)*	YES ☐ NO ☑	Acres Irrigated	Average Farm Size
Major Crop(s)	Farmable Land In Govt. Jurisdiction Acres: %	Amount of Farmland As Defined in FPPA Acres: %	
Name of Land Evaluation System Used	Name of State or Local Site Assessment System	Date Land Evaluation Returned by NRCS 3/31/23	

PART III *(To be completed by Federal Agency)*	Alternative Site Rating			
	Site A	Site B	Site C	Site D
A. Total Acres To Be Converted Directly	0			
B. Total Acres To Be Converted Indirectly	0			
C. Total Acres In Site	8.3 ac			
PART IV *(To be completed by NRCS)* Land Evaluation Information				
A. Total Acres Prime And Unique Farmland				
B. Total Acres Statewide Important or Local Important Farmland				
C. Percentage Of Farmland in County Or Local Govt. Unit To Be Converted				
D. Percentage Of Farmland in Govt. Jurisdiction With Same Or Higher Relative Value				
PART V (To be completed by NRCS) Land Evaluation Criterion Relative Value of Farmland To Be Converted (Scale of 0 to 100 Points)				

PART VI *(To be completed by Federal Agency)* Site Assessment Criteria *(Criteria are explained in 7 CFR 658.5 b. For Corridor project use form NRCS-CPA-106)*	**Maximum Points**	Site A	Site B	Site C	Site D
1. Area In Non-urban Use	(15)				
2. Perimeter In Non-urban Use	(10)				
3. Percent Of Site Being Farmed	(20)				
4. Protection Provided By State and Local Government	(20)				
5. Distance From Urban Built-up Area	(15)				
6. Distance To Urban Support Services	(15)				
7. Size Of Present Farm Unit Compared To Average	(10)				
8. Creation Of Non-farmable Farmland	(10)				
9. Availability Of Farm Support Services	(5)				
10. On-Farm Investments	(20)				
11. Effects Of Conversion On Farm Support Services	(10)				
12. Compatibility With Existing Agricultural Use	(10)				
TOTAL SITE ASSESSMENT POINTS	160	0	0	0	0
PART VII ***(To be completed by Federal Agency)***					
Relative Value Of Farmland *(From Part V)*	100	0	0	0	0
Total Site Assessment *(From Part VI above or local site assessment)*	160	0	0	0	0
TOTAL POINTS ***(Total of above 2 lines)***	260	0	0	0	0

Site Selected:	Date Of Selection	Was A Local Site Assessment Used? YES ☐ NO ☐

Reason For Selection:

Name of Federal agency representative completing this form:	Date:

(See Instructions on reverse side) **Form AD-1006 (03-02)**

STEPS IN THE PROCESSING THE FARMLAND AND CONVERSION IMPACT RATING FORM

Step 1 - Federal agencies (or Federally funded projects) involved in proposed projects that may convert farmland, as defined in the Farmland Protection Policy Act (FPPA) to nonagricultural uses, will initially complete Parts I and III of the form. For Corridor type projects, the Federal agency shall use form NRCS-CPA-106 in place of form AD-1006. The Land Evaluation and Site Assessment (LESA) process may also be accessed by visiting the FPPA website, http://fppa.nrcs.usda.gov/lesa/.

Step 2 - Originator (Federal Agency) will send one original copy of the form together with appropriate scaled maps indicating location(s)of project site(s), to the Natural Resources Conservation Service (NRCS) local Field Office or USDA Service Center and retain a copy for their files. (NRCS has offices in most counties in the U.S. The USDA Office Information Locator may be found at http://offices.usda.gov/scripts/ndISAPI.dll/oip_public/USA_map, or the offices can usually be found in the Phone Book under U.S. Government, Department of Agriculture. A list of field offices is available from the NRCS State Conservationist and State Office in each State.)

Step 3 - NRCS will, within 10 working days after receipt of the completed form, make a determination as to whether the site(s) of the proposed project contains prime, unique, statewide or local important farmland. (When a site visit or land evaluation system design is needed, NRCS will respond within 30 working days.

Step 4 - For sites where farmland covered by the FPPA will be converted by the proposed project, NRCS will complete Parts II, IV and V of the form.

Step 5 - NRCS will return the original copy of the form to the Federal agency involved in the project, and retain a file copy for NRCS records.

Step 6 - The Federal agency involved in the proposed project will complete Parts VI and VII of the form and return the form with the final selected site to the servicing NRCS office.

Step 7 - The Federal agency providing financial or technical assistance to the proposed project will make a determination as to whether the proposed conversion is consistent with the FPPA.

INSTRUCTIONS FOR COMPLETING THE FARMLAND CONVERSION IMPACT RATING FORM

(For Federal Agency)

Part I: When completing the "County and State" questions, list all the local governments that are responsible for local land use controls where site(s) are to be evaluated.

Part III: When completing item B (Total Acres To Be Converted Indirectly), include the following:

1. Acres not being directly converted but that would no longer be capable of being farmed after the conversion, because the conversion would restrict access to them or other major change in the ability to use the land for agriculture.
2. Acres planned to receive services from an infrastructure project as indicated in the project justification (e.g. highways, utilities planned build out capacity) that will cause a direct conversion.

Part VI: Do not complete Part VI using the standard format if a State or Local site assessment is used. With local and NRCS assistance, use the local Land Evaluation and Site Assessment (LESA).

1. Assign the maximum points for each site assessment criterion as shown in § 658.5(b) of CFR. In cases of corridor-type project such as transportation, power line and flood control, criteria #5 and #6 will not apply and will, be weighted zero, however, criterion #8 will be weighed a maximum of 25 points and criterion #11 a maximum of 25 points.

2. Federal agencies may assign relative weights among the 12 site assessment criteria other than those shown on the FPPA rule after submitting individual agency FPPA policy for review and comment to NRCS. In all cases where other weights are assigned, relative adjustments must be made to maintain the maximum total points at 160. For project sites where the total points equal or exceed 160, consider alternative actions, as appropriate, that could reduce adverse impacts (e.g. Alternative Sites, Modifications or Mitigation).

Part VII: In computing the "Total Site Assessment Points" where a State or local site assessment is used and the total maximum number of points is other than 160, convert the site assessment points to a base of 160.
Example: if the Site Assessment maximum is 200 points, and the alternative Site "A" is rated 180 points:

$$\frac{\text{Total points assigned Site A}}{\text{Maximum points possible}} = \frac{180}{200} \text{ X } 160 = 144 \text{ points for Site A}$$

For assistance in completing this form or FPPA process, contact the local NRCS Field Office or USDA Service Center.

NRCS employees, consult the FPPA Manual and/or policy for additional instructions to complete the AD-1006 form.

APPENDIX C – RESOLUTION

TOWN OF SWEETSER, INDIANA
SIGNATORY AUTHORIZATION RESOLUTION

WHEREAS, the Town of Sweetser, herein called the Applicant, has plans for a wastewater system improvements project to meet State and Federal regulations, such as the Clean Water Act, and the community intends to proceed with the construction of such works:

WHEREAS, the Town of Sweetser has adopted this Resolution dated MARCH 28, 2023.

NOW THEREFORE, BE IT RESOLVED by the Town Council, the governing body of said Town, that:

1. Kyle Taylor, Council President be authorized to make application for an SRF Loan and provide the Department of Environmental Management such information, data and documents pertaining to the loan process as may be required, and otherwise act as the authorized representative of the Applicant.

2. The Applicant agrees to comply with the Department of Environmental Management, State of Indiana and Federal requirements as they pertain to the SRF.

3. That two certified copies of the resolution be prepared and submitted as part of the Community's Preliminary Engineering Report.

Adopted this 28 day of MARCH, 2023.

The Town of Sweetser, Indiana
By and Through Its Council

Authorized Signatory

_____
Kyle Taylor – Council President

Matthew C. Stewart
Dr. Matt Stewart, PhD. – Council VP

Travis LeMaster
Travis LeMaster – Council Member

Chuck V. Briede
Chuck Briede - Council Member

Charles L. Myers III
Charles L. Myers III - Council Member

Attest: Jami Briede

TOWN OF SWEETSER
WASTEWATER PER ACCEPTANCE RESOLUTION

WHEREAS, the Town of Sweetser in Grant County, Indiana has caused a Preliminary Engineering Report dated March 2023 to be prepared by the consulting firm of Triad Associates, Inc.; and

WHEREAS, said plan has been presented to the public at a public hearing held March 28, 2023 for their comments; and

WHEREAS, the Town Council finds that there was not sufficient evidence presented in objection to the recommended project in the Preliminary Engineering Report.

NOW, THEREFORE, BE IT RESOLVED THAT:

The Town of Sweetser Wastewater System Improvements Preliminary Engineering Report dated March 2023 be approved and adopted by the Town Council; and

1. That said PER be submitted to the Indiana Department of Environmental Management for review and approval.

Passed and adopted by the Town Council of the Town of Sweetser, Indiana this 28 day of March 2023.

_____
Kyle Taylor – Council President

Matthew C. Stewart
_____
Dr. Matt Stewart, PhD. – Council VP

Travis LeMaster
_____
Travis LeMaster – Council Member

Chuck V. Briede
_____
Chuck Briede - Council Member

Charles L. Myers III
_____
Charles L. Myers III - Council Member

Attest: Jami Briede

APPENDIX D – PUBLIC HEARING REQUIREMENTS

Notice of Public Hearing
Town of Sweetser
Preliminary Engineering Report (PER) to obtain assistance from the Wastewater State Revolving Fund (SRF) Loan Program

The Town of Sweetser will hold a public hearing at 7:00 p.m. on Tuesday, March 28, 2023, at the Town Hall, which is located at 113 N. Main Street, Sweetser, Indiana, 46987.

Sweetser's engineering consultant, Triad Associates, Inc., will present the recommended wastewater project, including wastewater treatment plant improvements and sewer collection system and lift station rehabilitation, which are more fully described in the PER. The project will be funded through the Wastewater State Revolving Fund (WWSRF) loan program.

A copy of the PER will be available for public viewing at the Town Hall from March 17th through March 28th, 2023. Written comments regarding this project will be accepted through June 20, 2013 and should be sent to the Town Hall.

There will be the opportunity for questions and comments from the public at this meeting. Your participation is welcomed and encouraged. If you will require special assistance at the meeting, please contact the Town Hall at (765) 384-5333 or Clerk-Treasurer at (765) 384-5065.

Paxton Media Group
201 South 4th Street Paducah, KY 42003

John Potter
Town of Sweetser
P.O. Box 329
113 North Main Street
Sweetser, IN 46987

Class Liner Ad #70619061 Summary:

Slug Line: Notice of Public Hearing Town
Size: 2.00 x 3.10

Publication Cost	$20.52
Adjustments	$0.00
Net Cost	$20.52
Prepaid Amount	$0.00
Amount Due	$20.52

Order Detail:

Publication	Start	Stop	Insertions	Cost	Adjustments	Total
184MCTD1 Marion Chronicle Tribune	3/16/23	3/16/23	1	20.52	0.00	20.52

Notice of Public Hearing
Town of Sweetser
Preliminary Engineering Report (PER) to obtain assistance from the Wastewater State Revolving Fund (SRF) Loan Program

The Town of Sweetser will hold a public hearing at 7:00 p.m. on Tuesday, March 28, 2023, at the Town Hall, which is located at 113 N. Main Street, Sweetser, Indiana, 46987.

Sweetser's engineering consultant, Triad Associates, Inc., will present the recommended wastewater project, which includes sanitary sewer pipe lining, manhole and lift station repairs, and appurtenant work in the collection system to eliminate inflow and infiltration, improvements at the wastewater treatment plant, as well as sewer service for the Oak Hill School which are more fully described in the PER. The project will be funded through the Wastewater State Revolving Fund (WWSRF) loan program.

A copy of the PER will be available for public viewing at the Town Hall from March 18th through March 28th, 2023. Written comments regarding this project will be accepted through April 3, 2023 and should be sent to the Town Hall.

There will be the opportunity for questions and comments from the public at this meeting. Your participation is welcomed and encouraged. If you will require special assistance at the meeting, please contact the Town Hall at (765) 384-5333 or Clerk-Treasurer at (765) 384-5065.
HSPAXLP.03/16/2023

APPENDIX E – COST AND EFFECTIVENESS CERTIFICATION FORM

Cost & Effectiveness Certification Form

(Pursuant to Section 602(B)(13) of the Federal Water Pollution Control Act)
(Applies to all assistance recipients submitting an application on or after October 1, 2015)
(To be submitted prior to Participant's Wastewater Loan Closing)

Participant Name Town of Sweetser, Indiana		
Street Address 113 N. Main Street	P. O. Box Number PO Box 329	
City Sweetser	State IN	Zip Code 46987

Section 602(B)(13) of the Federal Water Pollution Control Act (FWPCA) requires a recipient of a loan to certify that the recipient:

1) has studied and evaluated the cost and effectiveness of the processes, materials, techniques, and technologies for carrying out the proposed project or activity for which assistance is sought under the Clean Water State Revolving Fund Loan Program; and
2) has selected, to the maximum extent practicable, a project or activity that maximizes the potential for efficient water use, reuse, recapture, and conservation, and energy conservation, taking into account –
   (i) the cost of constructing the project or activity;
   (ii) the cost of operating and maintaining the project or activity over the life of the project or activity; and
   (iii) the cost of replacing the project or activity

Certification

We hereby certify pursuant to Section 602(B)(13) that the Participant has completed the requirements of Section 602(B)(13) as set forth in items (1) and (2) above.

Signature of the Authorized Representative

Printed Name: Matt Stewart, Council VP

Signature: Matthew C. Stewart

Date: 03/28/2023

Signature of Consulting Engineer

Printed Name: Kun Liu

Signature: [illegible]

Date: 03/28/2023

APPENDIX F – PHOTO LOG OF WASTEWATER SYSTEM

Photo #1 – Plant Influent Screen

Photo #2 – Influent Flow Meter

Photo #3 – Control Panel Rust

Photo #4 – Sampler

Photo #5 – Aerator Tank

Photo #6 –Digester

Photo #7 – Chemical Injection Pump

Photo #8 – Splitter to Clarifier

Photo #9 – Sludge Polymer Pump

Photo #10 – Clarifier

Photo #11 – Lab

Photo #12 –Lab Safety Equipment

APPENDIX G – PHOTO LOG OF FLOODED AREAS

Photo #1 – Lift Station #4 (Case) Flooding

Photo #2 – Lift Station #4 (Case) Heavy Infiltration & Inflow

Photo #3 – Lift Station #3 (Bank) Flooding

Photo #4 – Lift Station #3 (Bank) Heavy Infiltration & Inflow

Photo #5 – Lift Station #2 Valve Vault Lid Traffic Damage

Photo #6 – Lift Station #3 (Bank) Flooding

Photo #7 – Inproperly sealed manhole between cone and chimney

Photo #8 – Inproperly sealed manhole with Infiltration & Inflow

APPENDIX H – OAK HILL HIGH SCHOOL LETTER OF INTENT

Letter of Intent

Date: March 13, 2023
To: Town Council of the Town of Sweeter, IN
From: Oak Hill United School Corporation, Board of School Trustees
Re: OHUSC/Town of Sweetser Regionalization Intent

To Whom It May Concern:

Oak Hill United School Corporation Board of School Trustees hereby provides this Letter of Intent to be used for the application and subsequent Preliminary Engineering Report in seeking funding from the Indiana Clean Water State Revolving Loan Fund (CWSRF). We are aware and understand, the intent of your projects which include Collection System and Wastewater Treatment Plant repairs as well as the construction of a Lift Station and Force Main to connect our Junior High/High School campus to the Sweetser Wastewater system. OHUSC currently operates a wastewater treatment plant, which would be decommissioned and removed in its entirety, and the wastewater from the High School & Jr. High campus and OHUSC Administration building would be collected at a lift station and pumped to the Town's wastewater system. OHUSC administration and Trustees are interested in pursuing this "regionalization" project with the Town of Sweetser who is seeking appropriate grant funding and financing from CWSRF and other potential sources. This letter of intent does not provide any monetary agreements. All monetary agreements including construction cost and rate structure will be determined after an offer by the CWSRF is provided to the Town. Should an offer of funding be provided by CWSRF, additional coordination between the Town and this Board of School Trustees will be required to determine the appropriate financial parameters. We further understand that we can withdraw from agreements at any time.

Respectfully submitted,

Aaron Pickering, President OHUSC Board of School Trustees

CC: Steve Brock, Financial Advisor; Lou Savka, Triad Associates, INC, Eric Woodmansee, AME Consulting

OHUSC Board of School trustees
1474 N 800 W-27 Converse, IN 46919 **T** 765.395.3341 **F** 765.395.3343

Oak Hill United School Corporation

ATTACHMENT NO. 12

2013 BID SET PLANS

PROPOSED WASTEWATER TREATMENT PLANT PROJECT

FOR THE

TOWN OF SWEETSER
GRANT COUNTY, IN.

MAY 2013

SHEET INDEX

SHEET NO.	DESCRIPTION
1	TITLE SHEET AND INDEX
G1	PROPOSED FLOW SCHEMATIC AND HYDRAULIC PROFILE
C1	EXISTING PROJECT SITE PLAN
C2	PROPOSED SITE PLAN
A1	PROPOSED BUILDING LAYOUT
A2	PROPOSED LABORATORY FLOOR PLAN
A3	PROPOSED UV/BLOWER BUILDING FLOOR PLAN
A4	PROPOSED ROOM FINISH AND DOOR/WINDOW SCHEDULES
A5	PROPOSED WALL SECTIONS
A6	PROPOSED BUILDING ELEVATIONS
A7	PROPOSED STORAGE STRUCTURE
S1	PROPOSED TREATMENT PLANT PLAN
S2	PROPOSED TREATMENT PLANT SECTIONS AND DETAILS
S3	PROPOSED CLARIFIER PLAN, SECTION AND DETAILS
S4	PROPOSED UV/POST AERATION TANK PLAN, SECTIONS AND DETAILS, AND PROPOSED BLOWER PAD PLAN AND SECTION
S5	STRUCTURAL DETAILS
P1	PROPOSED PLANT PIPING PLAN
P2	PROPOSED ROTO SCREEN PLAN AND DETAILS
P3	PROPOSED TREATMENT PLANT PLAN AND SECTION
P4	PROPOSED TREATMENT PLANT SECTION AND DETAILS
P5	PROPOSED CLARIFIER PLAN, SECTIONS AND DETAILS
P6	PROPOSED UV/POST AERATION TANK PLAN, SECTIONS AND DETAILS
P7	PROPOSED OUTFALL SEWER PLAN AND PROFILE
P8	PROPOSED WELL DETAILS
P9 & P10	MISCELLANEOUS DETAILS
LS1	PROPOSED FORCEMAIN/L.S. SITE PLAN
LS2 & LS3	EXISTING FORCEMAIN PLAN AND PROFILE
LS4	PROPOSED FORCEMAIN PLAN AND PROFILE
LS5 & LS6	PROPOSED LIFT STATION SITE AND DETAILS
LS7	PROPOSED LIFT STATION MISCELLANEOUS DETAILS
E1	PROPOSED ELECTRICAL SITE PLAN
E2	PROPOSED PLANT ELECTRICAL PLAN
E3	PROPOSED PLANT LIGHTING PLAN
E4	PROPOSED LABORATORY ELECTRICAL PLAN
E5	PROPOSED ELECTRICAL RISER DIAGRAM AND ELECTRICAL SCHEDULES

AREA MAP

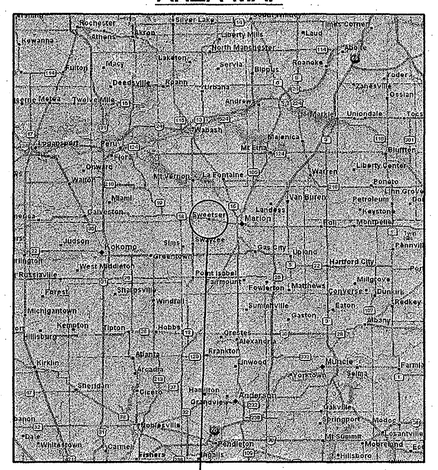

AREA LOCATION

N

LOCATION MAP

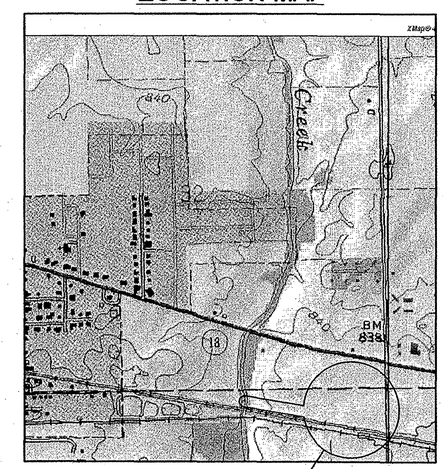

PROJECT LOCATION

TOWN COUNCIL

TRAVIS LeMASTER, PRESIDENT

STEVE KELLEY, VICE PRESIDENT

RICHARD GAMBLE, MEMBER

CHUCK BRIEDE, MEMBER

CARL MOORMAN, MEMBER

TOWN CLERK-TREASURER

EILEEN LeMASTER

TOWN ATTORNEY

KIM ROGERS

TOWN MAINTENANCE MANAGER

DEVIN COLE

PLANS PREPARED BY:

TRIAD ASSOCIATES INC.
5835 LAWTON LOOP EAST DRIVE
INDIANAPOLIS, INDIANA 46216
PHONE: 317-377-5230 FAX: 317-377-5241

NOTE:
ADDITIONAL RIGHT-OF-WAY OR EASEMENTS MAY NEED TO BE ACQUIRED FOR INSTALLATION OF SEWER.

DON'T DIG BLIND
CALL BEFORE YOU DIG
WITHIN INDIANA
1-800-382-5544
OUTSIDE INDIANA
1-800-428-5200

PER INDIANA STATE LAW IS-69-1991, IT IS AGAINST THE LAW TO EXCAVATE WITHOUT NOTIFYING THE UNDERGROUND LOCATION SERVICE TWO (2) WORKING DAYS BEFORE COMMENCING WORK.

NOTE: CONTRACTOR TO VERIFY ALL UTILITY LOCATIONS PRIOR TO THE START OF CONSTRUCTION

THESE PLANS CERTIFIED BY:

James W. Frazell, Professional Engineer

JAMES W. FRAZELL REGISTERED No. 17208 STATE OF INDIANA PROFESSIONAL ENGINEER
4/17/13

RE-DESIGN SET 06-17-13

DESIGN SUMMARY

PLANT COMPONENT	DESIGN PARAMETERS	DESIGN CAPACITY
PLANT FLOW	DESIGN AVERAGE DESIGN PEAK HOURLY POPULATION EQUIVALENT	150,000 GPD 865,000 GPD 1,582
DESIGN LOADINGS	BOD_5 TSS NH_3-N	215 mg/l (269 lb./day) 200 mg/l (250 lb./day) 35 mg/l (43.8 lb/day)
AERATION TANK	CONCRETE TANK w/ FINE BUBBLE DIFFUSERS	
	VOLUME	20,306 CF 151,890 GALLONS
	DAILY ORGANIC LOADING	269 lbs. BOD 5/day
	ORGANIC LOADING PER 1000 CUBIC FEET	13.2 lbs. BOD/1000 CF
	HYDRAULIC DETENTION	24 HRS. @ 150,000 GPD
AERATION/BLOWERS	3 POSITIVE DISPLACEMENT	325 SCFM/EA. (FOR AERATION TANKS, DIGESTER AND POST-AIR)
	AIR REQUIRED (AERATION TANK ONLY)	320 SCFM
CLARIFIER	2 UNIT, 25'ø x 14' SWD	
	SURFACE AREA	981 SF
	SURFACE SETTLING RATE	881 GPD / SF
	RETENTION TIME	16.4 HOURS @ DESIGN FLOW
	WEIR OVERFLOW RATE	5,986 GALS/day/FT @ PEAK HOURLY FLOW
ULTRA-VIOLET DISINFECTION	LOW-INTENSITY, HORIZONTAL	
	CONTACT TIME	8.7 SECONDS @ Q_P
	CAPACITY	.88 MGD
POST-AERATION	FINE BUBBLE DIFFUSERS	30 SCFM
PROPOSED RETURN/WASTE	SUB PUMP SYSTEM	0 – 15ED0% RETURN
PROPOSED AEROBIC DIGESTER	TOTAL DIGESTION VOLUME	79,822 GALLONS
	RETENTION TIME	153 DAYS @ 3% D.S.

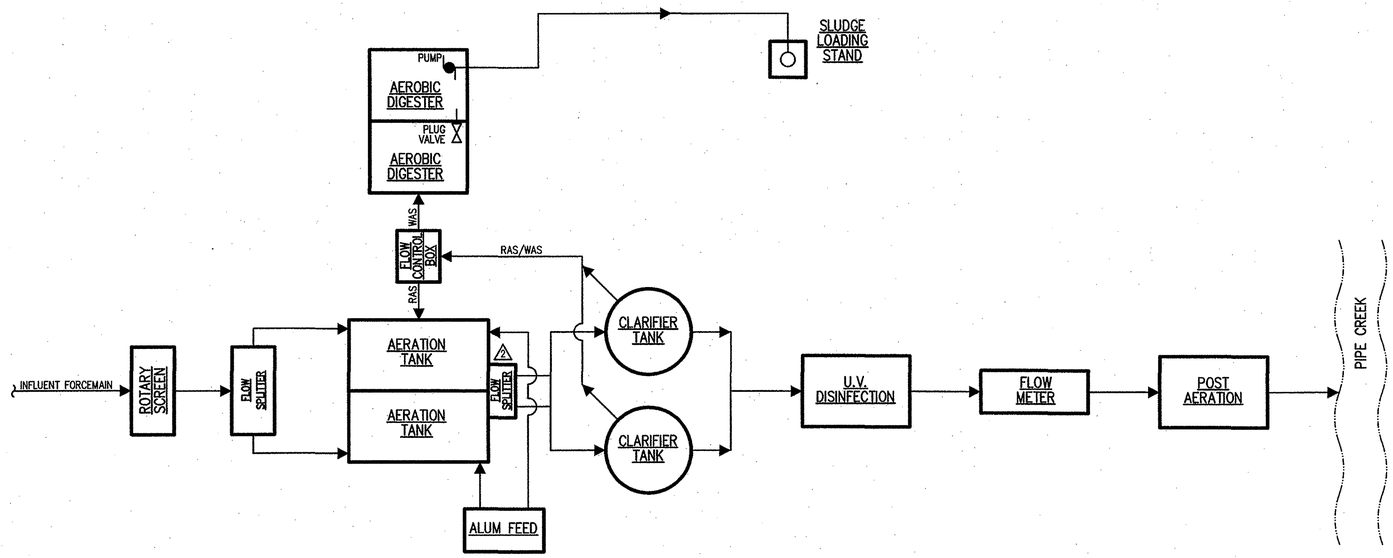

FLOW SCHEMATIC

NOT TO SCALE

VERTICAL SCALE 1"= 5'-0"

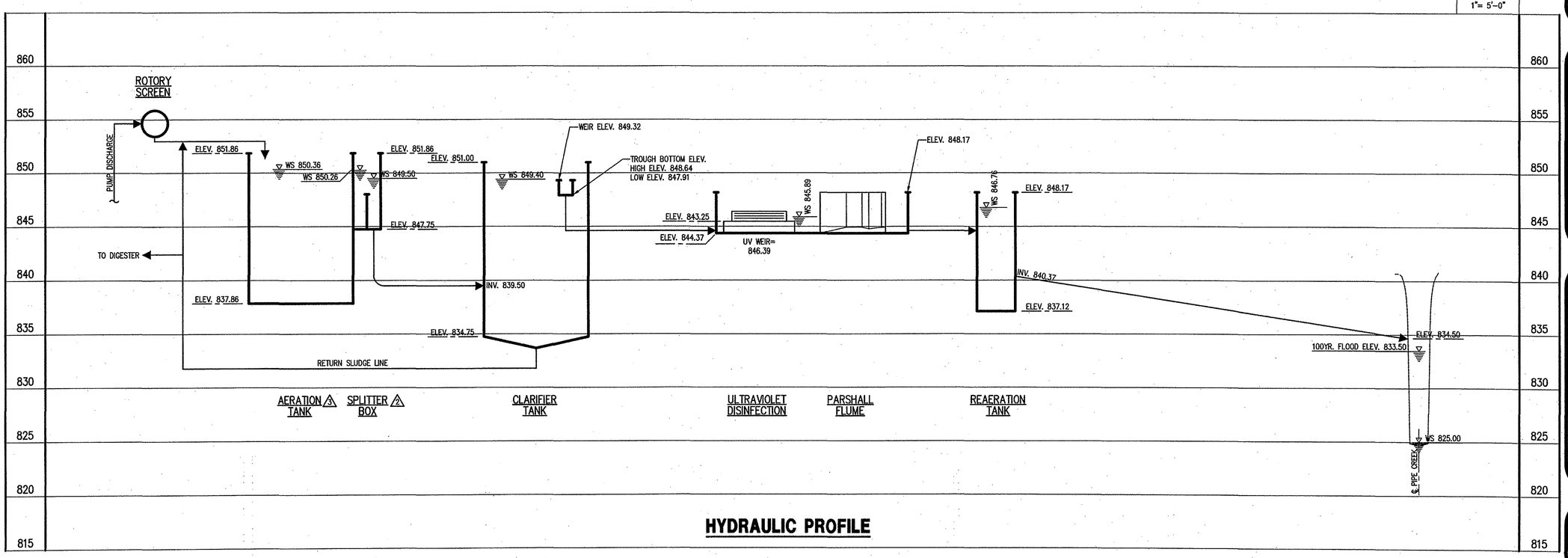

HYDRAULIC PROFILE

RE- DESIGN SET 06-17-13

CONSULTANT:

REVISIONS:

DATE	DESCRIPTION	BY
5/17/13	PROJECT REVISIONS	JRN
8/01/13	2 ADDED FLOW SPLITTER BOX	D.A.P.
8/01/13	3 CHANGED ELEVATIONS	D.A.P.

APPROVED BY:

JAMES W. FRAZELL REGISTERED No. 17208 STATE OF INDIANA PROFESSIONAL ENGINEER 8/2/13

THIS DRAWING AND THE IDEAS, DESIGNS AND CONCEPTS CONTAINED HEREIN ARE THE EXCLUSIVE INTELLECTUAL PROPERTY OF TRIAD ASSOCIATES, INC., AND ARE NOT TO BE USED OR REPRODUCED, IN WHOLE OR IN PART, WITHOUT THE WRITTEN CONSENT OF TRIAD ASSOCIATES, INC.

TRIAD ASSOCIATES INC.
5835 LAWTON LOOP EAST DRIVE
INDIANAPOLIS, INDIANA 46216
PHONE: 317-377-5230 FAX: 317-377-5241

DESIGNED FOR:

THE TOWN OF SWEETSER
GRANT COUNTY, INDIANA

SHEET TITLE:

PROPOSED FLOW SCHEMATIC AND HYDRAULIC PROFILE

JOB NUMBER: 201115D	
SCALE: AS NOTED	CHECKED BY: M.P.H.
PLOT SCALE: 1=50	PLOT DATE: 08/01/13
DRAWN BY: D.A.P.	DATE: MAY, 2013
DESIGNED BY: James W. Frazell, P.E.	
DRAWING NAME: 201115D-FlowHydREV2	

SHEET No.

G1

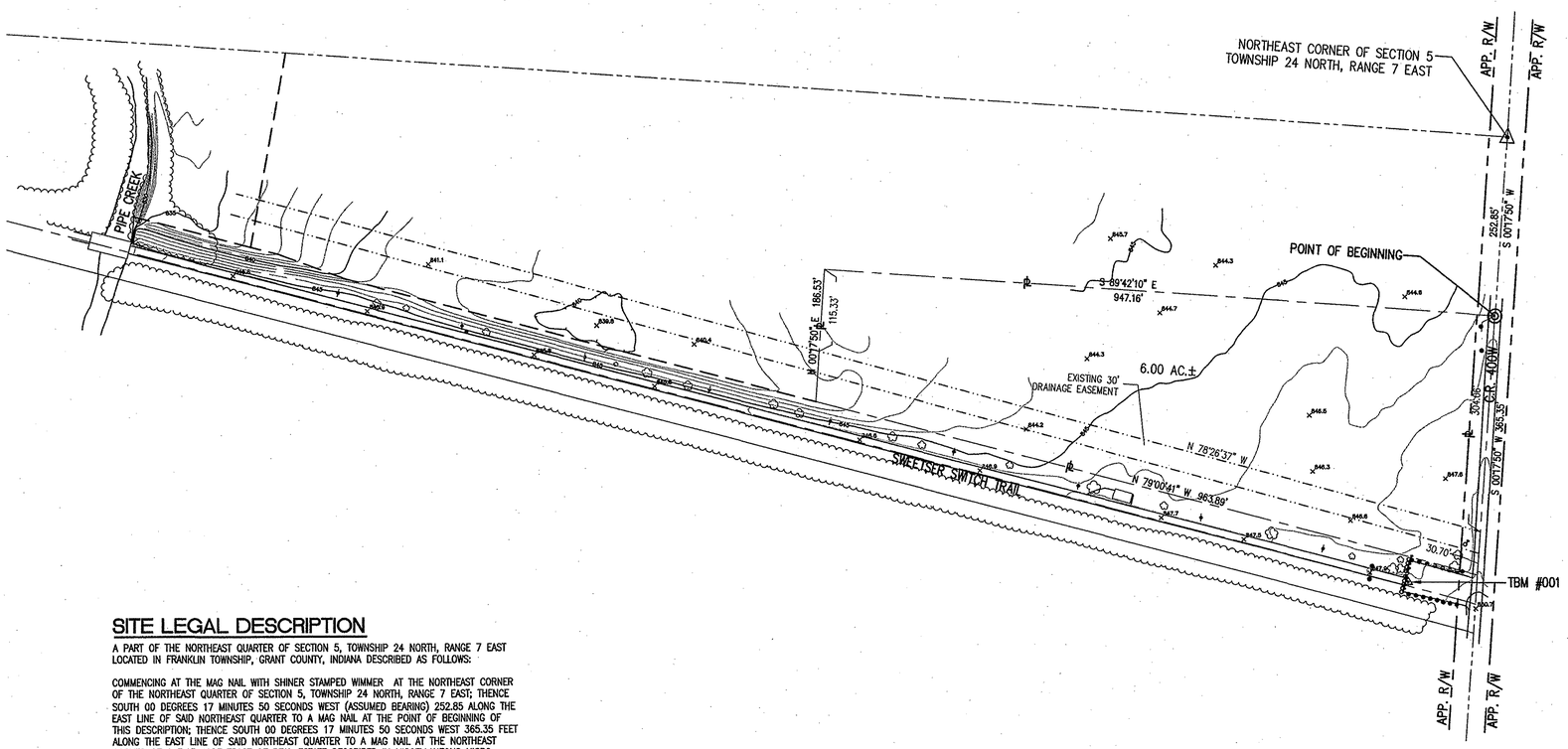

SITE LEGAL DESCRIPTION

A PART OF THE NORTHEAST QUARTER OF SECTION 5, TOWNSHIP 24 NORTH, RANGE 7 EAST LOCATED IN FRANKLIN TOWNSHIP, GRANT COUNTY, INDIANA DESCRIBED AS FOLLOWS:

COMMENCING AT THE MAG NAIL WITH SHINER STAMPED WIMMER AT THE NORTHEAST CORNER OF THE NORTHEAST QUARTER OF SECTION 5, TOWNSHIP 24 NORTH, RANGE 7 EAST; THENCE SOUTH 00 DEGREES 17 MINUTES 50 SECONDS WEST (ASSUMED BEARING) 252.85 ALONG THE EAST LINE OF SAID NORTHEAST QUARTER TO A MAG NAIL AT THE POINT OF BEGINNING OF THIS DESCRIPTION; THENCE SOUTH 00 DEGREES 17 MINUTES 50 SECONDS WEST 365.35 FEET ALONG THE EAST LINE OF SAID NORTHEAST QUARTER TO A MAG NAIL AT THE NORTHEAST CORNER OF A 5.15 ACRE TRACT OF REAL ESTATE DESCRIBED IN MISCELLANEOUS MICRO MC9600 PAGE 0260 (INSTRUMENT NUMBER 031741); THENCE NORTH 79 DEGREES 00 MINUTES 41 SECONDS WEST 963.89 FEET ALONG THE NORTHERLY LINE OF SAID 5.15 ACRE TRACT TO 5/8 INCH IRON ROD WITH YELLOW CAP STAMPED MILLER SURVEYING; THENCE NORTH 00 DEGREES 17 MINUTES 50 SECONDS EAST 186.53 FEET TO A 5/8 INCH IRON ROD WITH YELLOW CAP STAMPED MILLER SURVEYING THAT BEARS NORTH 89 DEGREES 42 MINUTES 10 SECONDS WEST FROM THE POINT OF BEGINNING; THENCE SOUTH 89 DEGREES 42 MINUTES 10 SECONDS EAST 947.16 FEET TO THE POINT OF BEGINNING CONTAINING 6.00 ACRES MORE OR LESS.

EXISTING SITE PLAN

SCALE: 1"=100'

NORTH

BENCHMARK INFORMATION

INDOT BENCHMARK #27-G-0042
ISHC BRONZE PLUG IN END BENT WALL OF BRIDGE ON STATE ROAD 18 OVER PIPE CREEK JUST WEST OF COUNTY ROAD 400W. ELEV. 817.06

INDOT BENCHMARK #27-F-0002
BRASS PLUG ON SIDEWALK, SOUTHWEST CORNER OF RAILROAD STRUCTURE. ELEV. 876.10

TBM #001
4"ø YELLOW POST IN CENTERLINE OF SWEETSER SWITCH TRAIL, EAST SIDE OF POST AT TOP OF BLACKTOP. ELEV. 853.19

RE-DESIGN SET 06-17-13

CONSULTANT:

REVISIONS:

DATE	DESCRIPTION	BY
5/17/13	PROJECT REVISIONS	JRN

APPROVED BY:

JAMES W. FRAZELL REGISTERED No. 17208 STATE OF INDIANA PROFESSIONAL ENGINEER

6/17/13

THIS DRAWING AND THE IDEAS, DESIGNS AND CONCEPTS CONTAINED HEREIN ARE THE EXCLUSIVE INTELLECTUAL PROPERTY OF TRIAD ASSOCIATES, INC., AND ARE NOT TO BE USED OR REPRODUCED, IN WHOLE OR IN PART, WITHOUT THE WRITTEN CONSENT OF TRIAD ASSOCIATES, INC.

TRIAD ASSOCIATES INC.
5835 LAWTON LOOP EAST DRIVE
INDIANAPOLIS, INDIANA 46216
PHONE: 317-377-5230 FAX: 317-377-5241

DESIGNED FOR:

THE TOWN OF SWEETSER
GRANT COUNTY, INDIANA

SHEET TITLE:

EXISTING PROJECT SITE PLAN

JOB NUMBER: 201115D	
SCALE: AS NOTED	CHECKED BY: M.P.H.
PLOT SCALE: 1=100	PLOT DATE: 06/17/13
DRAWN BY: D.A.P.	DATE: MAY, 2013
DESIGNED BY: James W. Frazell, P.E.	
DRAWING NAME: 201115D-ExSiteREV2	

SHEET No.

C1

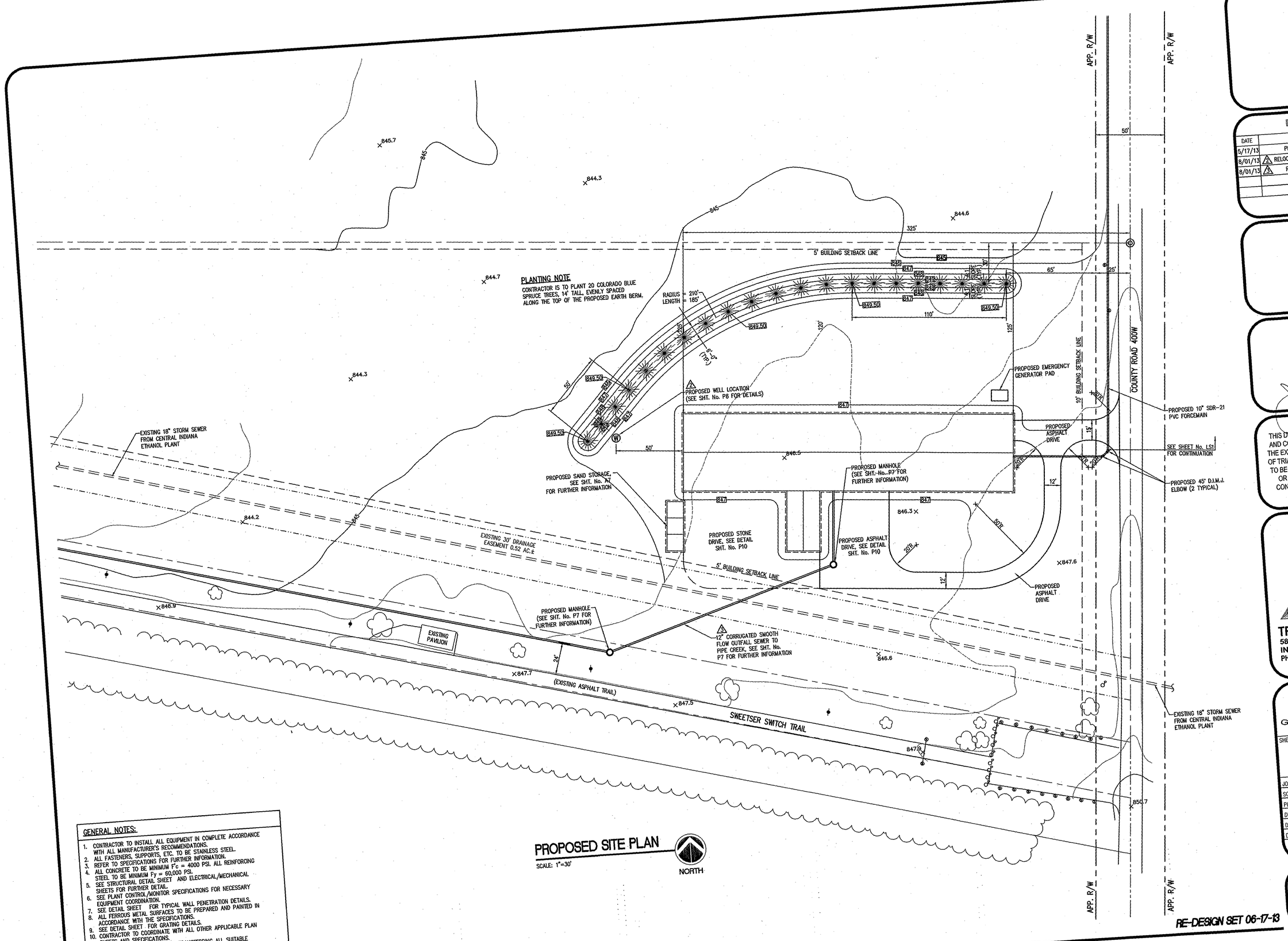

PROPOSED SITE PLAN

SCALE: 1"=30'

NORTH

RE-DESIGN SET 06-17-13

GENERAL NOTES:

1. CONTRACTOR TO INSTALL ALL EQUIPMENT IN COMPLETE ACCORDANCE WITH ALL MANUFACTURER'S RECOMMENDATIONS.
2. ALL FASTENERS, SUPPORTS, ETC. TO BE STAINLESS STEEL.
3. REFER TO SPECIFICATIONS FOR FURTHER INFORMATION.
4. ALL CONCRETE TO BE MINIMUM F'c = 4000 PSI. ALL REINFORCING STEEL TO BE MINIMUM Fy = 60,000 PSI.
5. SEE STRUCTURAL DETAIL SHEET AND ELECTRICAL/MECHANICAL SHEETS FOR FURTHER DETAIL.
6. SEE PLANT CONTROL/MONITOR SPECIFICATIONS FOR NECESSARY EQUIPMENT COORDINATION.
7. SEE DETAIL SHEET FOR TYPICAL WALL PENETRATION DETAILS.
8. ALL FERROUS METAL SURFACES TO BE PREPARED AND PAINTED IN ACCORDANCE WITH THE SPECIFICATIONS.
9. SEE DETAIL SHEET FOR GRATING DETAILS.
10. CONTRACTOR TO COORDINATE WITH ALL OTHER APPLICABLE PLAN SHEETS AND SPECIFICATIONS.
11. CONTRACTOR RESPONSIBLE FOR TRANSFERRING ALL SUITABLE TREATMENT MATERIAL FROM EXISTING TANKS TO THE PROPOSED TANKS.
12. CONTRACTOR TO VERIFY EQUIPMENT MOUNTING ELEVATIONS AND DIMENSIONS PRIOR TO CONSTRUCTION.
13. CONTRACTOR IS TO VISIT THE SITE PRIOR TO CONSTRUCTION IN ORDER TO IDENTIFY ANY EXISTING CONFLICTS TO BE ADDRESSED.

REVISIONS:

DATE	DESCRIPTION	BY
5/17/13	PROJECT REVISIONS	JRN
8/01/13	1 RELOCATED PROPOSED WELL	D.A.P.
8/01/13	3 REVISED PIPE TYPE	D.A.P.

APPROVED BY:

JAMES W. FRAZELL REGISTERED No. 17208 STATE OF INDIANA PROFESSIONAL ENGINEER 8/2/13

THIS DRAWING AND THE IDEAS, DESIGNS AND CONCEPTS CONTAINED HEREIN ARE THE EXCLUSIVE INTELLECTUAL PROPERTY OF TRIAD ASSOCIATES, INC., AND ARE NOT TO BE USED OR REPRODUCED, IN WHOLE OR IN PART, WITHOUT THE WRITTEN CONSENT OF TRIAD ASSOCIATES, INC.

TRIAD ASSOCIATES INC.
5835 LAWTON LOOP EAST DRIVE
INDIANAPOLIS, INDIANA 46216
PHONE: 317-377-5230 FAX: 317-377-5241

DESIGNED FOR:

THE TOWN OF SWEETSER
GRANT COUNTY, INDIANA

SHEET TITLE:

PROPOSED SITE PLAN

JOB NUMBER: 2011115D	
SCALE: AS NOTED	CHECKED BY: M.P.H.
PLOT SCALE: 1=30	PLOT DATE: 08/01/13
DRAWN BY: D.A.P.	DATE: MAY, 2013
DESIGNED BY: James W. Frazell, P.E.	
DRAWING NAME: 2011115D-PropSiteREV2	

SHEET No.

C2

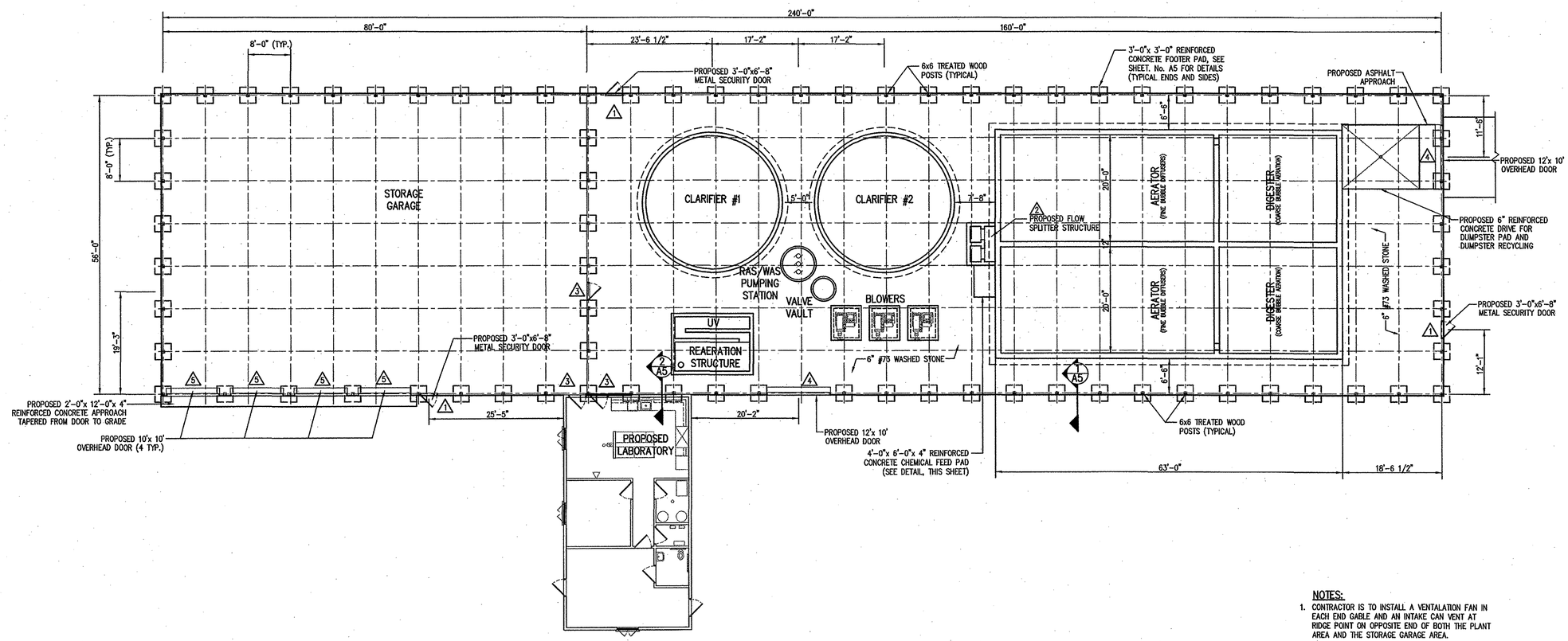

PROPOSED PLANT FLOOR PLAN

SCALE: 3/32" = 1'-0"

NORTH

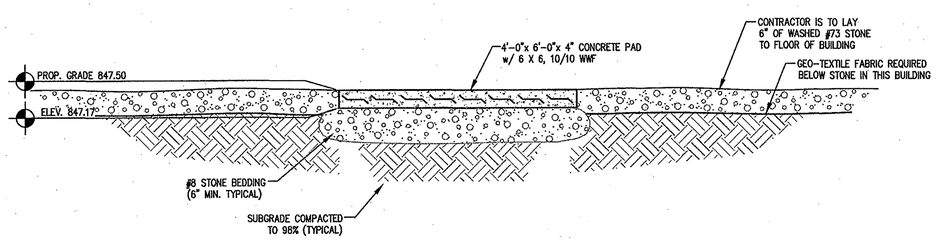

CHEMICAL FEED PAD DETAIL

NOT TO SCALE

NOTES:

1. CONTRACTOR IS TO INSTALL A VENTALATION FAN IN EACH END GABLE AND AN INTAKE CAN VENT AT RIDGE POINT ON OPPOSITE END OF BOTH THE PLANT AREA AND THE STORAGE GARAGE AREA.
2. CONTRACTOR IS TO INSTALL A MINIMUM OF 20% TRANSLUCENT PANELS TO THE PROPOSED ROOF SYSTEM IN BOTH THE PLANT AREA AND THE STORAGE GARAGE AREA.

GENERAL NOTES:

1. CONTRACTOR TO INSTALL ALL EQUIPMENT IN COMPLETE ACCORDANCE WITH ALL MANUFACTURER'S RECOMMENDATIONS.
2. ALL FASTENERS, SUPPORTS, ETC. TO BE STAINLESS STEEL.
3. REFER TO SPECIFICATIONS FOR FURTHER INFORMATION.
4. ALL CONCRETE TO BE MINIMUM F'c = 4000 PSI. ALL REINFORCING STEEL TO BE MINIMUM Fy = 60,000 PSI.
5. SEE STRUCTURAL DETAIL SHEET AND ELECTRICAL/MECHANICAL SHEETS FOR FURTHER DETAIL.
6. SEE PLANT CONTROL/MONITOR SPECIFICATIONS FOR NECESSARY EQUIPMENT COORDINATION.
7. SEE DETAIL SHEET FOR TYPICAL WALL PENETRATION DETAILS.
8. ALL FERROUS METAL SURFACES TO BE PREPARED AND PAINTED IN ACCORDANCE WITH THE SPECIFICATIONS.
9. SEE DETAIL SHEET FOR GRATING DETAILS.
10. CONTRACTOR TO COORDINATE WITH ALL OTHER APPLICABLE PLAN SHEETS AND SPECIFICATIONS.
11. CONTRACTOR RESPONSIBLE FOR TRANSFERRING ALL SUITABLE TREATMENT MATERIAL FROM EXISTING TANKS TO THE PROPOSED TANKS.
12. CONTRACTOR TO VERIFY EQUIPMENT MOUNTING ELEVATIONS AND DIMENSIONS PRIOR TO CONSTRUCTION.
13. CONTRACTOR IS TO VISIT THE SITE PRIOR TO CONSTRUCTION IN ORDER TO IDENTIFY ANY EXISTING CONFLICTS TO BE ADDRESSED.

RE-DESIGN SET 06-17-13

CONSULTANT:

REVISIONS:

DATE	DESCRIPTION	BY
3/17/13	PROJECT REVISIONS	DAP
8/01/13	2 ADDED FLOW SPLITTER STRUCTURE	D.A.P.

APPROVED BY:

JAMES W. FRAZELL REGISTERED No. 17208 STATE OF INDIANA PROFESSIONAL ENGINEER 8/2/13

THIS DRAWING AND THE IDEAS, DESIGNS AND CONCEPTS CONTAINED HEREIN ARE THE EXCLUSIVE INTELLECTUAL PROPERTY OF TRIAD ASSOCIATES, INC., AND ARE NOT TO BE USED OR REPRODUCED, IN WHOLE OR IN PART, WITHOUT THE WRITTEN CONSENT OF TRIAD ASSOCIATES, INC.

TRIAD ASSOCIATES INC.
5835 LAWTON LOOP EAST DRIVE
INDIANAPOLIS, INDIANA 46216
PHONE: 317-377-5230 FAX: 317-377-5241

DESIGNED FOR:

THE TOWN OF SWEETSER
GRANT COUNTY, INDIANA

SHEET TITLE:

PROPOSED PLANT FLOOR PLAN & STORAGE GARAGE

JOB NUMBER: 201115D	
SCALE: AS NOTED	CHECKED BY: M.P.H.
PLOT SCALE: 1:1	PLOT DATE: 08/01/13
DRAWN BY: JET/DAP	DATE: MAY, 2013
DESIGNED BY: James W. Frazell, P.E.	
DRAWING NAME: 201115D-LayoutREV2	

SHEET No.

A1

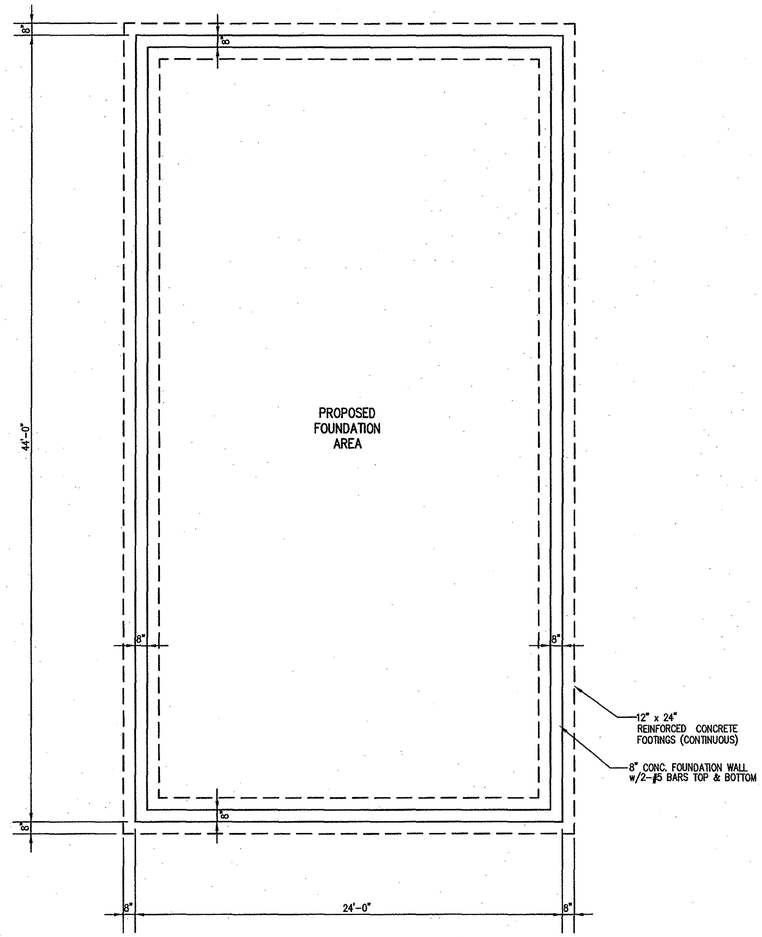

FOUNDATION PLAN

SCALE: 1/4"= 1'-0"

NORTH

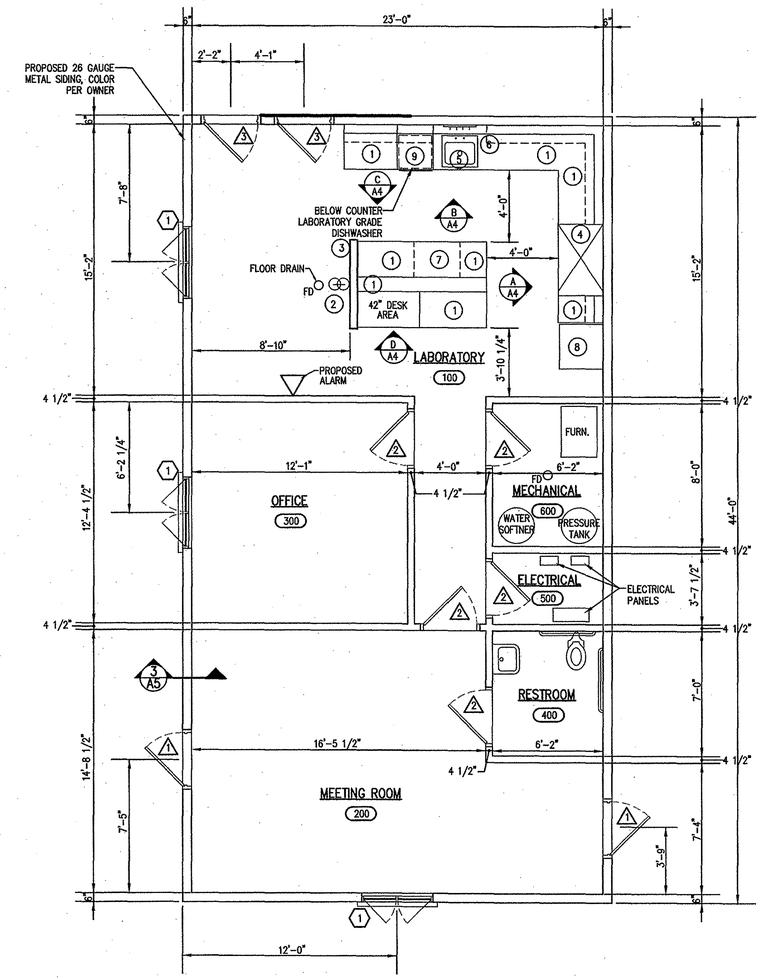

FLOOR PLAN

SCALE: 1/4"= 1'-0"

NORTH

GENERAL NOTES:

1. CONTRACTOR TO INSTALL ALL EQUIPMENT IN COMPLETE ACCORDANCE WITH ALL MANUFACTURER'S RECOMMENDATIONS.
2. ALL FASTENERS, SUPPORTS, ETC. TO BE STAINLESS STEEL.
3. REFER TO SPECIFICATIONS FOR FURTHER INFORMATION.
4. ALL CONCRETE TO BE MINIMUM F'c = 4000 PSI. ALL REINFORCING STEEL TO BE MINIMUM Fy = 60,000 PSI.
5. SEE STRUCTURAL DETAIL SHEET AND ELECTRICAL/MECHANICAL SHEETS FOR FURTHER DETAIL.
6. SEE PLANT CONTROL/MONITOR SPECIFICATIONS FOR NECESSARY EQUIPMENT COORDINATION.
7. SEE DETAIL SHEET FOR TYPICAL WALL PENETRATION DETAILS.
8. ALL FERROUS METAL SURFACES TO BE PREPARED AND PAINTED IN ACCORDANCE WITH THE SPECIFICATIONS.
9. SEE DETAIL SHEET FOR GRATING DETAILS.
10. CONTRACTOR TO COORDINATE WITH ALL OTHER APPLICABLE PLAN SHEETS AND SPECIFICATIONS.
11. CONTRACTOR RESPONSIBLE FOR TRANSFERRING ALL SUITABLE TREATMENT MATERIAL FROM EXISTING TANKS TO THE PROPOSED TANKS.
12. CONTRACTOR TO VERIFY EQUIPMENT MOUNTING ELEVATIONS AND DIMENSIONS PRIOR TO CONSTRUCTION.
13. CONTRACTOR IS TO VISIT THE SITE PRIOR TO CONSTRUCTION IN ORDER TO IDENTIFY ANY EXISTING CONFLICTS TO BE ADDRESSED.

KEY NOTES:

1. 1" MODIFIED EPOXY RESINTOP 14" BACKSPLASH AND DRIP LIP
2. EMERGENCY SHOWER AND EYEWASH UNIT
3. 2"x4" GYPSUM BOARD ISOLATION WALL
4. 48" FUME HOOD UNIT
5. EPOXY RESIN SINK UNIT
6. LABORATORY PEG BOARD
7. INCUBATOR (BY OTHERS)
8. REFRIGERATOR (BY OTHERS)
9. BELOW COUNTER TOP, LABORATORY GRADE DISHWASHER

LEGEND

- (1) WINDOW SCHEDULE DESIGNATION
- (1) DOOR SCHEDULE DESIGNATION
- (100) ROOM DESIGNATION
- (B/A3) INTERIOR ELEVATION DESIGNATION

RE-DESIGN SET 06-17-13

CONSULTANT:

REVISIONS:

DATE	DESCRIPTION	BY
5/17/13	PROJECT REVISIONS	DAP

APPROVED BY:

JAMES W. FRAZELL REGISTERED No. 17208 STATE OF INDIANA PROFESSIONAL ENGINEER

6/17/13

THIS DRAWING AND THE IDEAS, DESIGNS AND CONCEPTS CONTAINED HEREIN ARE THE EXCLUSIVE INTELLECTUAL PROPERTY OF TRIAD ASSOCIATES, INC., AND ARE NOT TO BE USED OR REPRODUCED, IN WHOLE OR IN PART, WITHOUT THE WRITTEN CONSENT OF TRIAD ASSOCIATES, INC.

TRIAD ASSOCIATES INC.
5835 LAWTON LOOP EAST DRIVE
INDIANAPOLIS, INDIANA 46216
PHONE: 317-377-5230 FAX: 317-377-5241

DESIGNED FOR:

THE TOWN OF SWEETSER
GRANT COUNTY, INDIANA

SHEET TITLE:

PROPOSED LABORATORY FOUNDATION AND FLOOR PLANS

JOB NUMBER: 201115D	
SCALE: AS NOTED	CHECKED BY: M.P.H.
PLOT SCALE: 1=48	PLOT DATE: 06/17/13
DRAWN BY: D.A.P.	DATE: JUNE, 2012
DESIGNED BY: James W. Frazell, P.E.	
DRAWING NAME: 201115D-Lab01REV2	

SHEET No.

A2

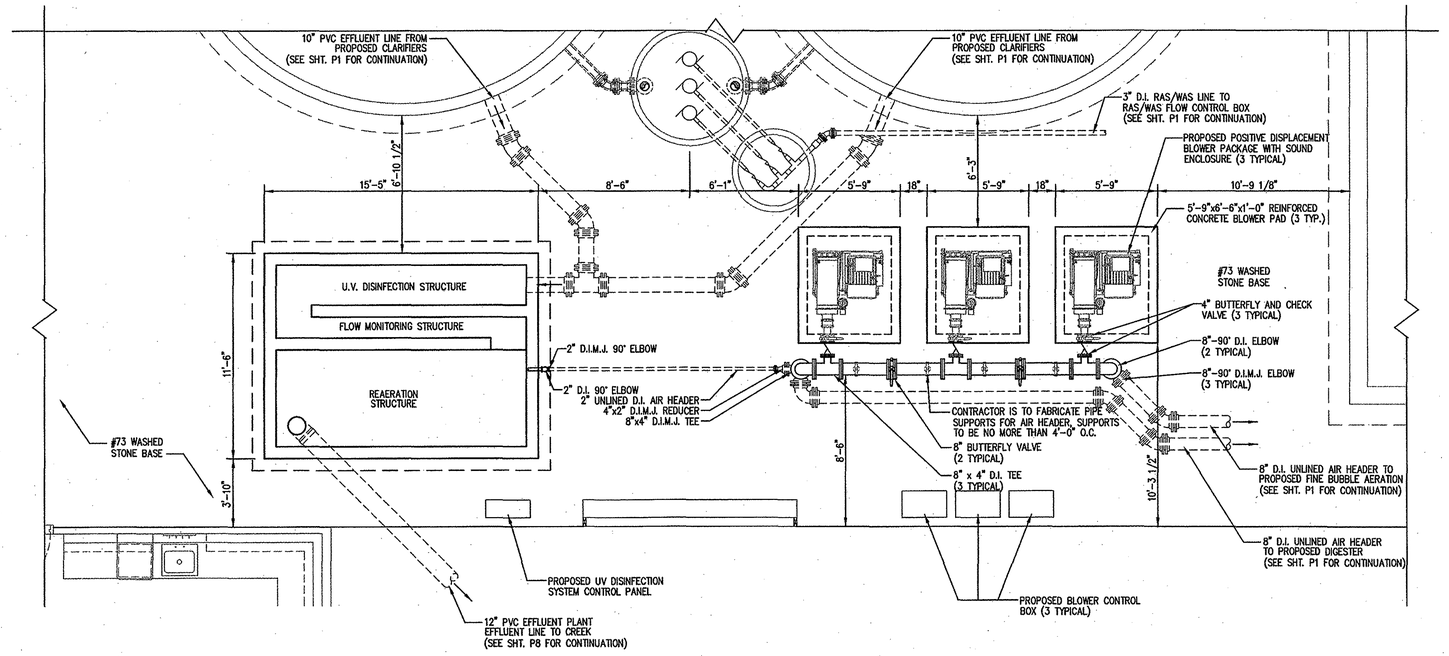

FLOOR PLAN

SCALE: 1/4"= 1'-0"

NORTH

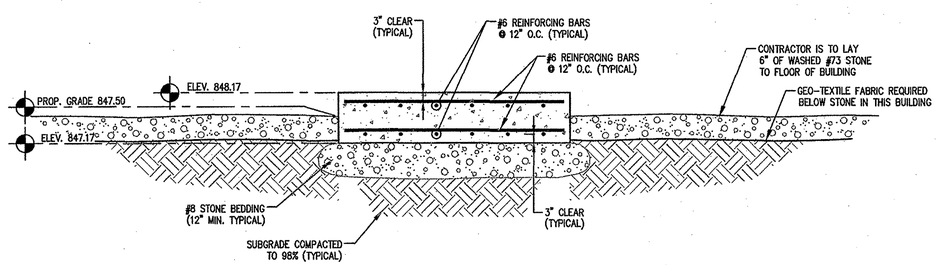

BLOWER PAD SECTION

SCALE: 1/2"= 1'-0"

GENERAL NOTES:

1. CONTRACTOR TO INSTALL ALL EQUIPMENT IN COMPLETE ACCORDANCE WITH ALL MANUFACTURER'S RECOMMENDATIONS.
2. ALL FASTENERS, SUPPORTS, ETC. TO BE STAINLESS STEEL.
3. REFER TO SPECIFICATIONS FOR FURTHER INFORMATION.
4. ALL CONCRETE TO BE MINIMUM F'c = 4000 PSI. ALL REINFORCING STEEL TO BE MINIMUM Fy = 60,000 PSI.
5. SEE STRUCTURAL DETAIL SHEET AND ELECTRICAL/MECHANICAL SHEETS FOR FURTHER DETAIL.
6. SEE PLANT CONTROL/MONITOR SPECIFICATIONS FOR NECESSARY EQUIPMENT COORDINATION.
7. SEE DETAIL SHEET FOR TYPICAL WALL PENETRATION DETAILS.
8. ALL FERROUS METAL SURFACES TO BE PREPARED AND PAINTED IN ACCORDANCE WITH THE SPECIFICATIONS.
9. SEE DETAIL SHEET FOR GRATING DETAILS.
10. CONTRACTOR TO COORDINATE WITH ALL OTHER APPLICABLE PLAN SHEETS AND SPECIFICATIONS.
11. CONTRACTOR RESPONSIBLE FOR TRANSFERRING ALL SUITABLE TREATMENT MATERIAL FROM EXISTING TANKS TO THE PROPOSED TANKS.
12. CONTRACTOR TO VERIFY EQUIPMENT MOUNTING ELEVATIONS AND DIMENSIONS PRIOR TO CONSTRUCTION.
13. CONTRACTOR IS TO VISIT THE SITE PRIOR TO CONSTRUCTION IN ORDER TO IDENTIFY ANY EXISTING CONFLICTS TO BE ADDRESSED.

RE-DESIGN SET 06-17-13

CONSULTANT:

REVISIONS:

DATE	DESCRIPTION	BY
5/17/13	PROJECT REVISIONS	JRN

APPROVED BY:

JAMES W. FRAZELL REGISTERED No. 17208 STATE OF INDIANA PROFESSIONAL ENGINEER

6/17/13

THIS DRAWING AND THE IDEAS, DESIGNS AND CONCEPTS CONTAINED HEREIN ARE THE EXCLUSIVE INTELLECTUAL PROPERTY OF TRIAD ASSOCIATES, INC., AND ARE NOT TO BE USED OR REPRODUCED, IN WHOLE OR IN PART, WITHOUT THE WRITTEN CONSENT OF TRIAD ASSOCIATES, INC.

TRIAD ASSOCIATES INC.
5835 LAWTON LOOP EAST DRIVE
INDIANAPOLIS, INDIANA 46216
PHONE: 317-377-5230 FAX: 317-377-5241

DESIGNED FOR:

THE TOWN OF SWEETSER
GRANT COUNTY, INDIANA

SHEET TITLE:

PROPOSED ULTRA-VIOLET DISINFECTION AND BLOWERS

JOB NUMBER: 201115D	
SCALE: AS NOTED	CHECKED BY: M.P.H.
PLOT SCALE: 1=48	PLOT DATE: 06/07/13
DRAWN BY: D.A.P.	DATE: MAY, 2013
DESIGNED BY: James W. Frazell, P.E.	
DRAWING NAME: 201115D-UVBlow01REV2	

SHEET No.

A3

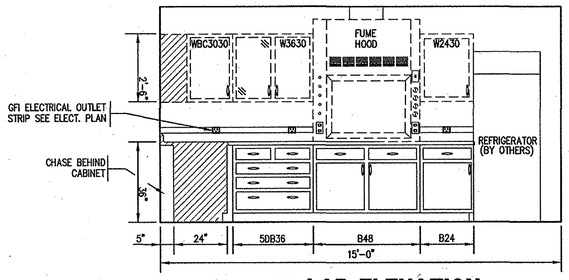

A/A4 LAB ELEVATION

SCALE: 3/8" =1'-0"

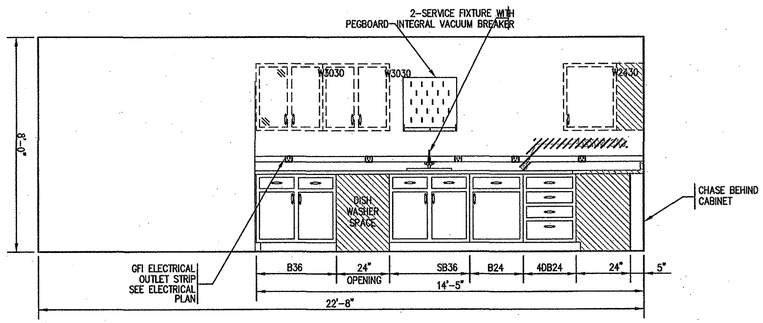

B/A4 LAB ELEVATION

SCALE: 3/8" =1'-0"

NOTES:

1. ALL CABINETS TO BE SOLID HARDWOOD CONSTRUCTION. SEE SPECIFICATIONS FOR FURTHER INFORMATION.
2. ALL LAB COUNTER TOPS SHALL BE 1" EPOXY RESIN CONSTRUCTION WITH 5" INTEGRAL BACKSPLASH.
3. CONTRACTOR TO SUBMIT STAIN SAMPLES FOR SELECTION DURING CONSTRUCTION.
4. ALL LAB SINKS TO BE EPOXY RESIN CONSTRUCTION.
5. WALL HUNG CABINETS TO HAVE SHATTER RESISTANT GLASS DOORS.

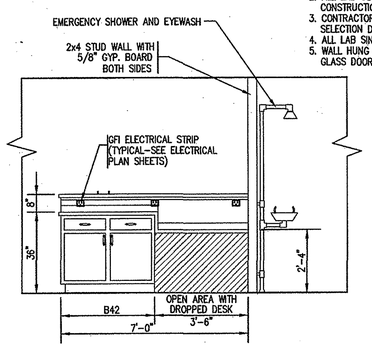

C/A4 LAB ELEV. TABLE

SCALE: 3/8" =1'-0"

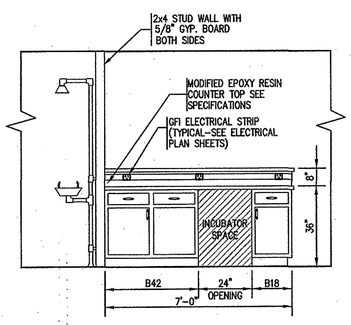

D/A4 LAB ELEV. TABLE

SCALE: 3/8" =1'-0"

ROOM FINISH SCHEDULE

ROOM NUMBER	ROOM NAME	FLOORS: CONCRETE SEALER	FLOORS: VINYL COMPOSITION TILE	FLOORS: CARPET	FLOORS: EXPOSED T&G PLYWOOD (PAINTED)	FLOORS: #73 WASHED STONE	BASE: RUBBER	BASE: CERAMIC TILE COVE	BASE:	BASE:	WALLS: EXPOSED WOOD FRAMING	WALLS: PAINTED 1/2" DRYWALL	WALLS: PAINTED PLYWOOD	WALLS: 6" VINYL BACKED INSULATION	WALLS: SATIN PAINT	WALLS: SEMI GLOSS PAINT	WALLS: GLOSS PAINT	WAINSCOT: MOISTURE RESISTANT PRESSURE TREATED PLYWOOD	WAINSCOT:	WAINSCOT HEIGHT	CEILING: PAINTED GYPSUM BOARD	CEILING: FLAT PAINT	CEILING: SEMI-GLOSS PAINT	CEILING: 2X4 SUSPENDED CEILING TILE SYSTEM, EPOXY PAINT	CEILING: PRESSURE TREATED PLYWOOD	CEILING: EXPOSED ROOF TRUSSES	CEILING HEIGHT	REMARKS
CONTROL BUILDING																												
100	LABORATORY	●					●					●				●					●	●					8'-0"±	
200	MEETING ROOM & HALLWAY	●					●					●				●					●	●					8'-0"±	
300	OFFICE	●					●					●				●					●	●					8'-0"±	
400	RESTROOM	●					●					●				●					●	●					8'-0"±	
500	ELECTRICAL ROOM	●					●					●				●					●	●					8'-0"±	
600	MECHANICAL ROOM	●					●					●				●					●	●					8'-0"±	

DOOR SCHEDULE

DOOR # / ROOM #	LOCATION	DOOR: SIZE	DOOR: THICKNESS	DOOR: TYPE	DOOR: MATERIAL	FRAME: TYPE	FRAME: MATERIAL	LOUVERS/LITES	HARDWARE SET #	THRESHOLD MATERIAL	REMARKS
100	LABORATORY	3'-0" x 6'-8"	1 3/4"	B	INSUL. METAL	STEEL	HOLLOW METAL	–	1	SEE SPEC'S.	1 HOUR RATED ASSEMBLY (2 DOORS)
200	MEETING ROOM	3'-0" x 6'-8"	1 3/4"	B	INSUL. METAL	STEEL	HOLLOW METAL	–	1	SEE SPEC'S.	
200	MEETING ROOM	3'-0" x 6'-8"	1 3/4"	B	INSUL. METAL	STEEL	HOLLOW METAL	–	2	SEE SPEC'S.	(2 DOORS)
300	OFFICE	3'-0" x 6'-8"	1 3/4"	A	INSUL. METAL	STEEL	HOLLOW METAL	–	1	SEE SPEC'S.	
400	RESTROOM	3'-0" x 6'-8"	1 3/4"	A	INSUL. METAL	STEEL	HOLLOW METAL	–	1	SEE SPEC'S.	
500	ELECTRICAL ROOM	3'-0" x 6'-8"	1 3/4"	B	INSUL. METAL	STEEL	HOLLOW METAL	–	1	SEE SPEC'S.	
600	MECHANICAL ROOM	3'-0" x 6'-8"	1 3/4"	B	INSUL. METAL	STEEL	HOLLOW METAL	–	1	SEE SPEC'S.	
	PLANT	3'-0" x 6'-8"	1 1/4"	B	INSUL. METAL	STEEL	HOLLOW METAL	–	2	SEE SPEC'S.	(2 DOORS)
	PLANT	12'-0" x 10'-0" O.H.	–	A	–	STEEL	HOLLOW METAL	(4) 18" X 12" TEMP.	–	SEE SPEC'S.	(2 DOORS)
	STORAGE GARAGE	3'-0" x 6'-8"	1 1/4"	B	INSUL. METAL	STEEL	HOLLOW METAL	–	2	SEE SPEC'S.	
	STORAGE GARAGE	3'-0" x 6'-8"	1 3/4"	B	INSUL. METAL	STEEL	HOLLOW METAL	–	1	SEE SPEC'S.	1 HOUR RATED ASSEMBLY
	STORAGE GARAGE	10'-0" x 10'-0" O.H.	–	A	INSUL. PANELS	STEEL	HOLLOW METAL	(4) 18" X 12" TEMP.	–	SEE SPEC'S.	(4 DOORS)

WINDOW SCHEDULE

MARK	LOCATION	APPROX. OPENING SIZE: WIDTH	APPROX. OPENING SIZE: HEIGHT	WINDOW TYPE	FRAME: TYPE	FRAME: JAMB	FRAME: SILL	FRAME: HEAD	REMARKS
1	LABORATORY	4'-0"	4'-1"	4242 DOUBLE PANE INSUL. CASEMENT	VINYL CLAD WOOD	WJ1	WS1	WH1	(TOTAL OF TWO WINDOW UNITS)
1	MEETING ROOM	4'-0"	4'-1"	4242 DOUBLE PANE INSUL. CASEMENT	VINYL CLAD WOOD	WJ1	WS1	WH1	(TOTAL OF TWO WINDOW UNITS)
1	OFFICE	4'-0"	4'-1"	4242 DOUBLE PANE INSUL. CASEMENT	VINYL CLAD WOOD	WJ1	WS1	WH1	(TOTAL OF TWO WINDOW UNITS)

GENERAL NOTES:

1. CONTRACTOR TO COORDINATE WITH OTHER APPLICABLE PLAN SHEETS FOR IMPROVEMENTS.
2. SEE SHEET S5 FOR FURTHER REINFORCED CONCRETE STRUCTURAL DETAILS.

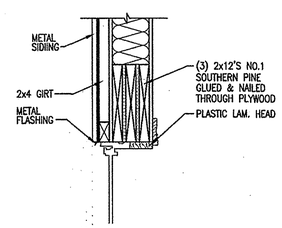

HEAD DETAIL

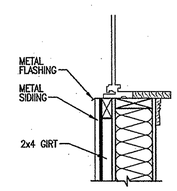

SILL DETAIL

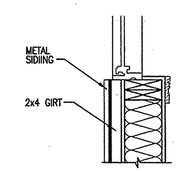

JAM DETAIL

WINDOW DETAILS

SCALE: NONE

RE-DESIGN SET 06-17-13

CONSULTANT:

REVISIONS:

DATE	DESCRIPTION	BY
5/17/13	PROJECT REVISIONS	DAP

APPROVED BY:

JAMES W. FRAZELL REGISTERED No. 17208 STATE OF INDIANA PROFESSIONAL ENGINEER

6/17/13

THIS DRAWING AND THE IDEAS, DESIGNS AND CONCEPTS CONTAINED HEREIN ARE THE EXCLUSIVE INTELLECTUAL PROPERTY OF TRIAD ASSOCIATES, INC., AND ARE NOT TO BE USED OR REPRODUCED, IN WHOLE OR IN PART, WITHOUT THE WRITTEN CONSENT OF TRIAD ASSOCIATES, INC.

TRIAD ASSOCIATES INC.
5835 LAWTON LOOP EAST DRIVE
INDIANAPOLIS, INDIANA 46216
PHONE: 317-377-5230 FAX: 317-377-5241

DESIGNED FOR:

THE TOWN OF SWEETSER
GRANT COUNTY, INDIANA

SHEET TITLE:

PROPOSED LABORATORY CABINET ELEVATIONS AND DOOR, WINDOW AND ROOM FINISH SCHEDULES

JOB NUMBER: 201115D	
SCALE: AS NOTED	CHECKED BY: M.P.H.
PLOT SCALE: 1=32	PLOT DATE: 06/17/13
DRAWN BY: D.A.P.	DATE: MAY, 2013
DESIGNED BY: James W. Frazell, P.E.	
DRAWING NAME: 201115D-Lab02REV2	

SHEET No.

A4

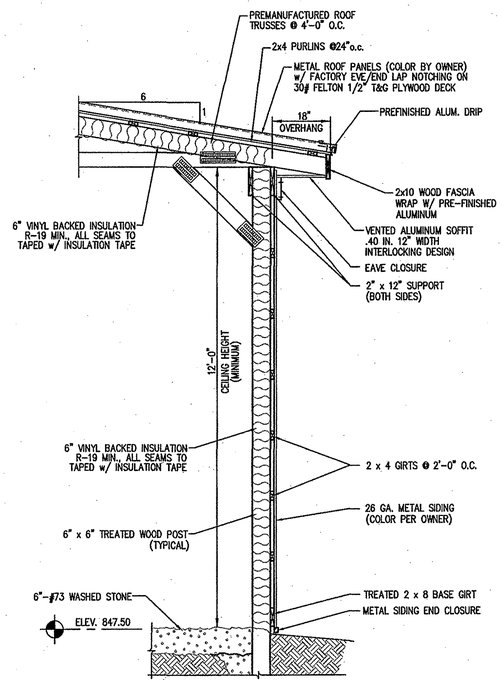

WALL SECTION 1/A5
NOT TO SCALE

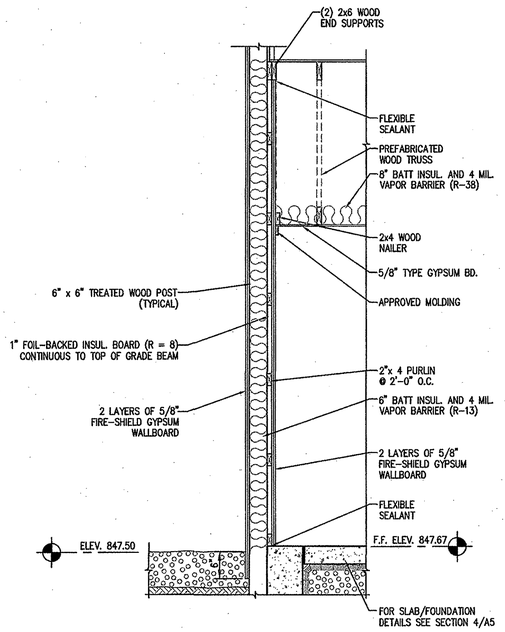

WALL SECTION 2/A5
NOT TO SCALE

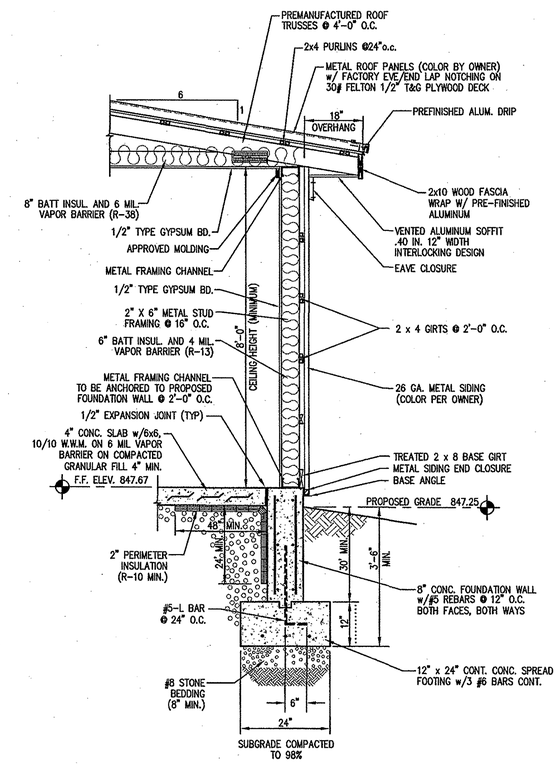

WALL SECTION 3/A5
NOT TO SCALE

GENERAL NOTES:

1. CONTRACTOR TO INSTALL ALL EQUIPMENT IN COMPLETE ACCORDANCE WITH ALL MANUFACTURER'S RECOMMENDATIONS.
2. ALL FASTENERS, SUPPORTS, ETC. TO BE STAINLESS STEEL.
3. REFER TO SPECIFICATIONS FOR FURTHER INFORMATION.
4. ALL CONCRETE TO BE MINIMUM F'c = 4000 PSI. ALL REINFORCING STEEL TO BE MINIMUM Fy = 60,000 PSI.
5. SEE STRUCTURAL DETAIL SHEET AND ELECTRICAL/MECHANICAL SHEETS FOR FURTHER DETAIL.
6. SEE PLANT CONTROL/MONITOR SPECIFICATIONS FOR NECESSARY EQUIPMENT COORDINATION.
7. SEE DETAIL SHEET FOR TYPICAL WALL PENETRATION DETAILS.
8. ALL FERROUS METAL SURFACES TO BE PREPARED AND PAINTED IN ACCORDANCE WITH THE SPECIFICATIONS.
9. SEE DETAIL SHEET FOR GRATING DETAILS.
10. CONTRACTOR TO COORDINATE WITH ALL OTHER APPLICABLE PLAN SHEETS AND SPECIFICATIONS.
11. CONTRACTOR RESPONSIBLE FOR TRANSFERRING ALL SUITABLE TREATMENT MATERIAL FROM EXISTING TANKS TO THE PROPOSED TANKS.
12. CONTRACTOR TO VERIFY EQUIPMENT MOUNTING ELEVATIONS AND DIMENSIONS PRIOR TO CONSTRUCTION.
13. CONTRACTOR IS TO VISIT THE SITE PRIOR TO CONSTRUCTION IN ORDER TO IDENTIFY ANY EXISTING CONFLICTS TO BE ADDRESSED.

RE-DESIGN SET 06-17-13

CONSULTANT:

REVISIONS:

DATE	DESCRIPTION	BY
5/17/13	PROJECT REVISIONS	JRN

APPROVED BY:

JAMES W. FRAZELL REGISTERED No. 17208 STATE OF INDIANA PROFESSIONAL ENGINEER 6/17/13

THIS DRAWING AND THE IDEAS, DESIGNS AND CONCEPTS CONTAINED HEREIN ARE THE EXCLUSIVE INTELLECTUAL PROPERTY OF TRIAD ASSOCIATES, INC., AND ARE NOT TO BE USED OR REPRODUCED, IN WHOLE OR IN PART, WITHOUT THE WRITTEN CONSENT OF TRIAD ASSOCIATES, INC.

TRIAD ASSOCIATES INC.
5835 LAWTON LOOP EAST DRIVE
INDIANAPOLIS, INDIANA 46216
PHONE: 317-377-5230 FAX: 317-377-5241

DESIGNED FOR:

THE TOWN OF SWEETSER
GRANT COUNTY, INDIANA

SHEET TITLE:

PROPOSED PLANT, LABORATORY AND UV/BLOWER BUILDING WALL SECTIONS

JOB NUMBER: 201115D	
SCALE: AS NOTED	CHECKED BY: M.P.H.
PLOT SCALE: 1=48	PLOT DATE: 06/17/13
DRAWN BY: D.A.P.	DATE: MAY, 2013
DESIGNED BY: James W. Frazell, P.E.	
DRAWING NAME: 201115D-WallSecREV2	

SHEET No.

A5

GENERAL NOTES:

1. CONTRACTOR TO INSTALL ALL EQUIPMENT IN COMPLETE ACCORDANCE WITH ALL MANUFACTURER'S RECOMMENDATIONS.
2. ALL FASTENERS, SUPPORTS, ETC. TO BE STAINLESS STEEL.
3. REFER TO SPECIFICATIONS FOR FURTHER INFORMATION.
4. ALL CONCRETE TO BE MINIMUM F'c = 4000 PSI. ALL REINFORCING STEEL TO BE MINIMUM Fy = 60,000 PSI.
5. SEE STRUCTURAL DETAIL SHEET AND ELECTRICAL/MECHANICAL SHEETS FOR FURTHER DETAIL.
6. SEE PLANT CONTROL/MONITOR SPECIFICATIONS FOR NECESSARY EQUIPMENT COORDINATION.
7. SEE DETAIL SHEET FOR TYPICAL WALL PENETRATION DETAILS.
8. ALL FERROUS METAL SURFACES TO BE PREPARED AND PAINTED IN ACCORDANCE WITH THE SPECIFICATIONS.
9. SEE DETAIL SHEET FOR GRATING DETAILS.
10. CONTRACTOR TO COORDINATE WITH ALL OTHER APPLICABLE PLAN SHEETS AND SPECIFICATIONS.
11. CONTRACTOR RESPONSIBLE FOR TRANSFERRING ALL SUITABLE TREATMENT MATERIAL FROM EXISTING TANKS TO THE PROPOSED TANKS.
12. CONTRACTOR TO VERIFY EQUIPMENT MOUNTING ELEVATIONS AND DIMENSIONS PRIOR TO CONSTRUCTION.
13. CONTRACTOR IS TO VISIT THE SITE PRIOR TO CONSTRUCTION IN ORDER TO IDENTIFY ANY EXISTING CONFLICTS TO BE ADDRESSED.

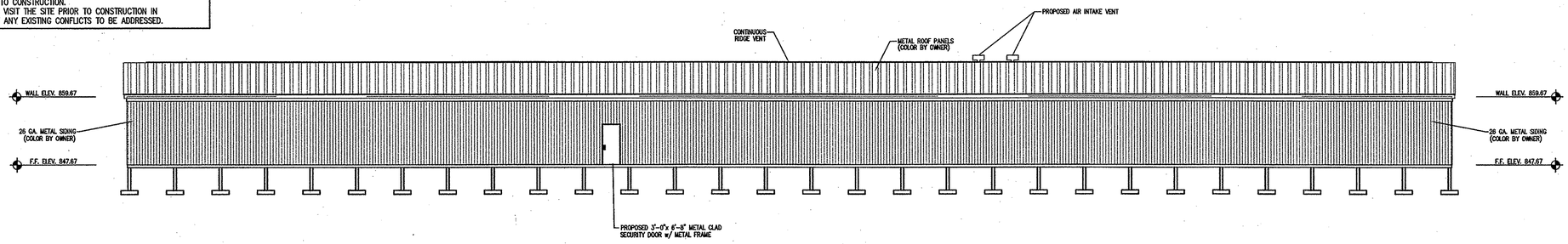

NORTH ELEVATION

SCALE: 3/32" = 1'-0"

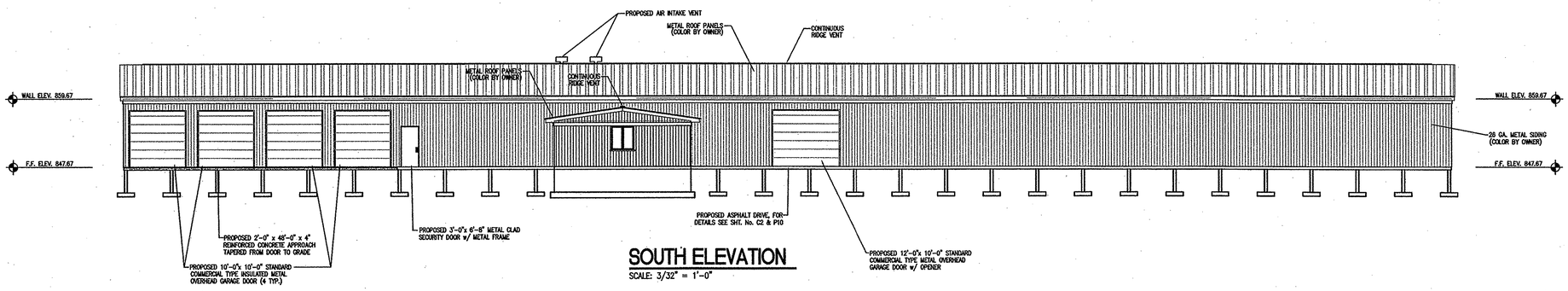

SOUTH ELEVATION

SCALE: 3/32" = 1'-0"

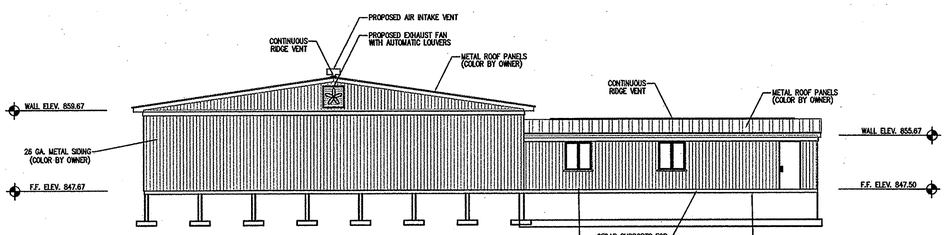

WEST ELEVATION

SCALE: 3/32" = 1'-0"

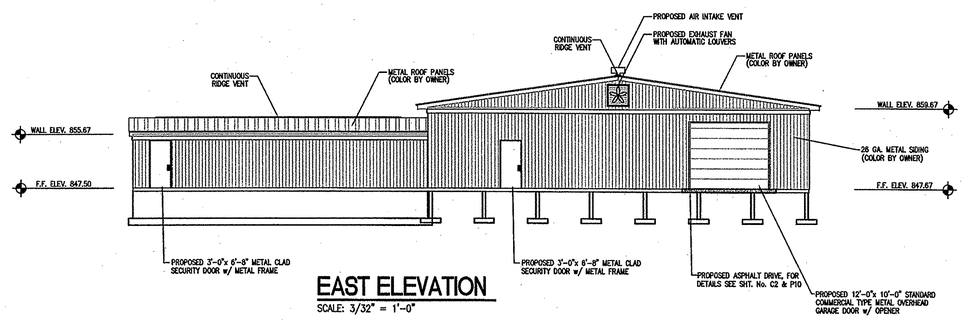

EAST ELEVATION

SCALE: 3/32" = 1'-0"

RE-DESIGN SET 06-17-13

CONSULTANT:

REVISIONS:

DATE	DESCRIPTION	BY
5/17/13	PROJECT REVISIONS	JRN

APPROVED BY:

JAMES W. FRAZELL REGISTERED No. 17208 STATE OF INDIANA PROFESSIONAL ENGINEER

6/17/13

THIS DRAWING AND THE IDEAS, DESIGNS AND CONCEPTS CONTAINED HEREIN ARE THE EXCLUSIVE INTELLECTUAL PROPERTY OF TRIAD ASSOCIATES, INC., AND ARE NOT TO BE USED OR REPRODUCED, IN WHOLE OR IN PART, WITHOUT THE WRITTEN CONSENT OF TRIAD ASSOCIATES, INC.

TRIAD ASSOCIATES INC.
5835 LAWTON LOOP EAST DRIVE
INDIANAPOLIS, INDIANA 46216
PHONE: 317-377-5230 FAX: 317-377-5241

DESIGNED FOR:

THE TOWN OF SWEETSER
GRANT COUNTY, INDIANA

SHEET TITLE:

PROPOSED PLANT, LABORATORY AND UV/BLOWER BUILDING ELEVATIONS

JOB NUMBER: 201115D	
SCALE: AS NOTED	CHECKED BY: M.P.H.
PLOT SCALE: 1=1	PLOT DATE: 06/17/13
DRAWN BY: D.A.P.	DATE: MAY, 2013
DESIGNED BY: James W. Frazell, P.E.	
DRAWING NAME: 201115d-ElevsREV2	

SHEET No.

A6

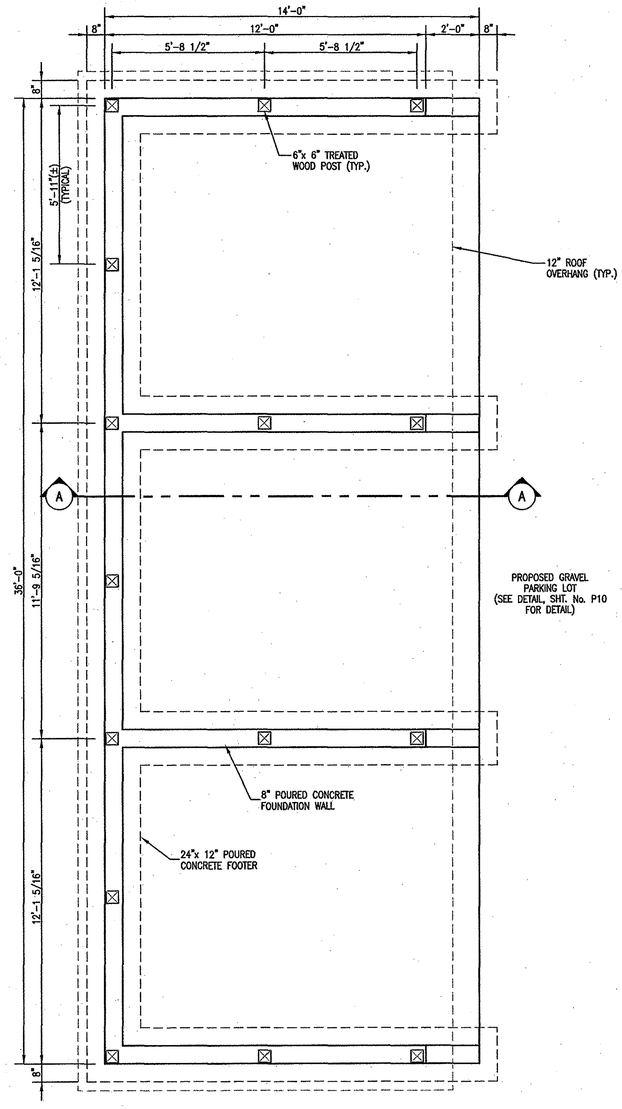

PROPOSED STORAGE BUILDING PLAN

3/8" = 1'-0"

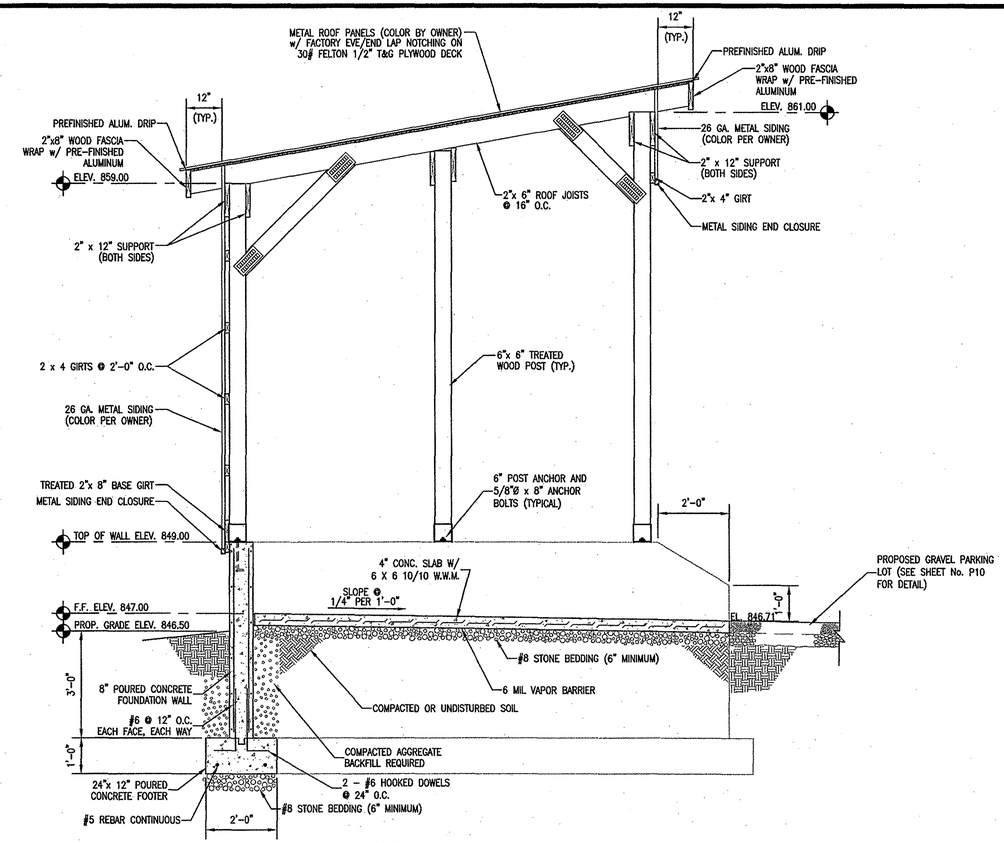

SECTION A-A

1/2" = 1'-0"

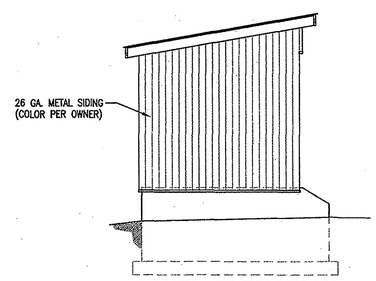

SOUTH ELEVATION

SCALE: 3/16" = 1'-0"

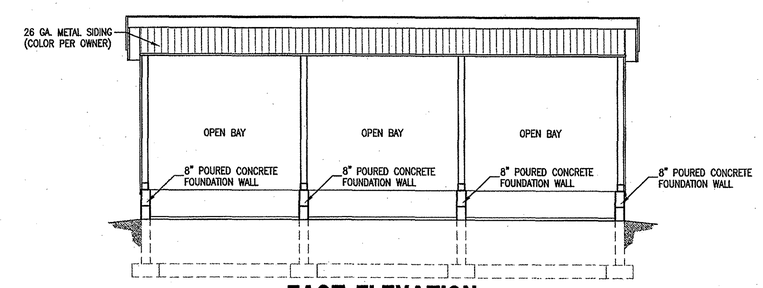

EAST ELEVATION

SCALE: 3/16" = 1'-0"

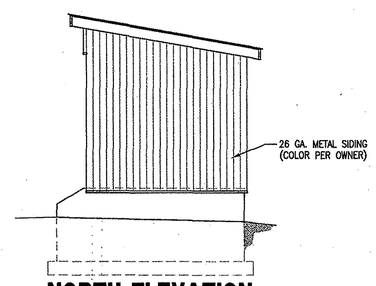

NORTH ELEVATION

SCALE: 3/16" = 1'-0"

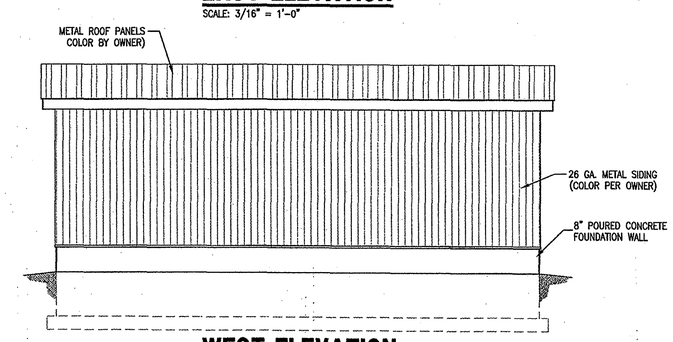

WEST ELEVATION

SCALE: 3/16" = 1'-0"

GENERAL NOTES:

1. CONTRACTOR TO INSTALL ALL EQUIPMENT IN COMPLETE ACCORDANCE WITH ALL MANUFACTURER'S RECOMMENDATIONS.
2. ALL FASTENERS, SUPPORTS, ETC. TO BE STAINLESS STEEL.
3. REFER TO SPECIFICATIONS FOR FURTHER INFORMATION.
4. ALL CONCRETE TO BE MINIMUM F'c = 4000 PSI. ALL REINFORCING STEEL TO BE MINIMUM Fy = 60,000 PSI.
5. SEE STRUCTURAL DETAIL SHEET AND ELECTRICAL/MECHANICAL SHEETS FOR FURTHER DETAIL.
6. SEE PLANT CONTROL/MONITOR SPECIFICATIONS FOR NECESSARY EQUIPMENT COORDINATION.
7. SEE DETAIL SHEET FOR TYPICAL WALL PENETRATION DETAILS.
8. ALL FERROUS METAL SURFACES TO BE PREPARED AND PAINTED IN ACCORDANCE WITH THE SPECIFICATIONS.
9. SEE DETAIL SHEET FOR GRATING DETAILS.
10. CONTRACTOR TO COORDINATE WITH ALL OTHER APPLICABLE PLAN SHEETS AND SPECIFICATIONS.
11. CONTRACTOR RESPONSIBLE FOR TRANSFERRING ALL SUITABLE TREATMENT MATERIAL FROM EXISTING TANKS TO THE PROPOSED TANKS.
12. CONTRACTOR TO VERIFY EQUIPMENT MOUNTING ELEVATIONS AND DIMENSIONS PRIOR TO CONSTRUCTION.
13. CONTRACTOR IS TO VISIT THE SITE PRIOR TO CONSTRUCTION IN ORDER TO IDENTIFY ANY EXISTING CONFLICTS TO BE ADDRESSED.

RE-DESIGN SET 06-17-13

CONSULTANT:

REVISIONS:

DATE	DESCRIPTION	BY

APPROVED BY:

JAMES W. FRAZELL REGISTERED No. 17208 STATE OF INDIANA PROFESSIONAL ENGINEER 6/17/13

THIS DRAWING AND THE IDEAS, DESIGNS AND CONCEPTS CONTAINED HEREIN ARE THE EXCLUSIVE INTELLECTUAL PROPERTY OF TRIAD ASSOCIATES, INC., AND ARE NOT TO BE USED OR REPRODUCED, IN WHOLE OR IN PART, WITHOUT THE WRITTEN CONSENT OF TRIAD ASSOCIATES, INC.

TRIAD ASSOCIATES INC.
5835 LAWTON LOOP EAST DRIVE
INDIANAPOLIS, INDIANA 46216
PHONE: 317-377-5230 FAX: 317-377-5241

DESIGNED FOR:

THE TOWN OF SWEETSER
GRANT COUNTY, INDIANA

SHEET TITLE:

PROPOSED STORAGE BUILDING

JOB NUMBER: 201115D	
SCALE: AS NOTED	CHECKED BY: M.P.H.
PLOT SCALE: 1=1	PLOT DATE: 06/17/13
DRAWN BY: D.A.P.	DATE: May, 2013
DESIGNED BY: James W. Frazell, P.E.	
DRAWING NAME: 201115D-StorageStrucREV2	

SHEET No.

A7

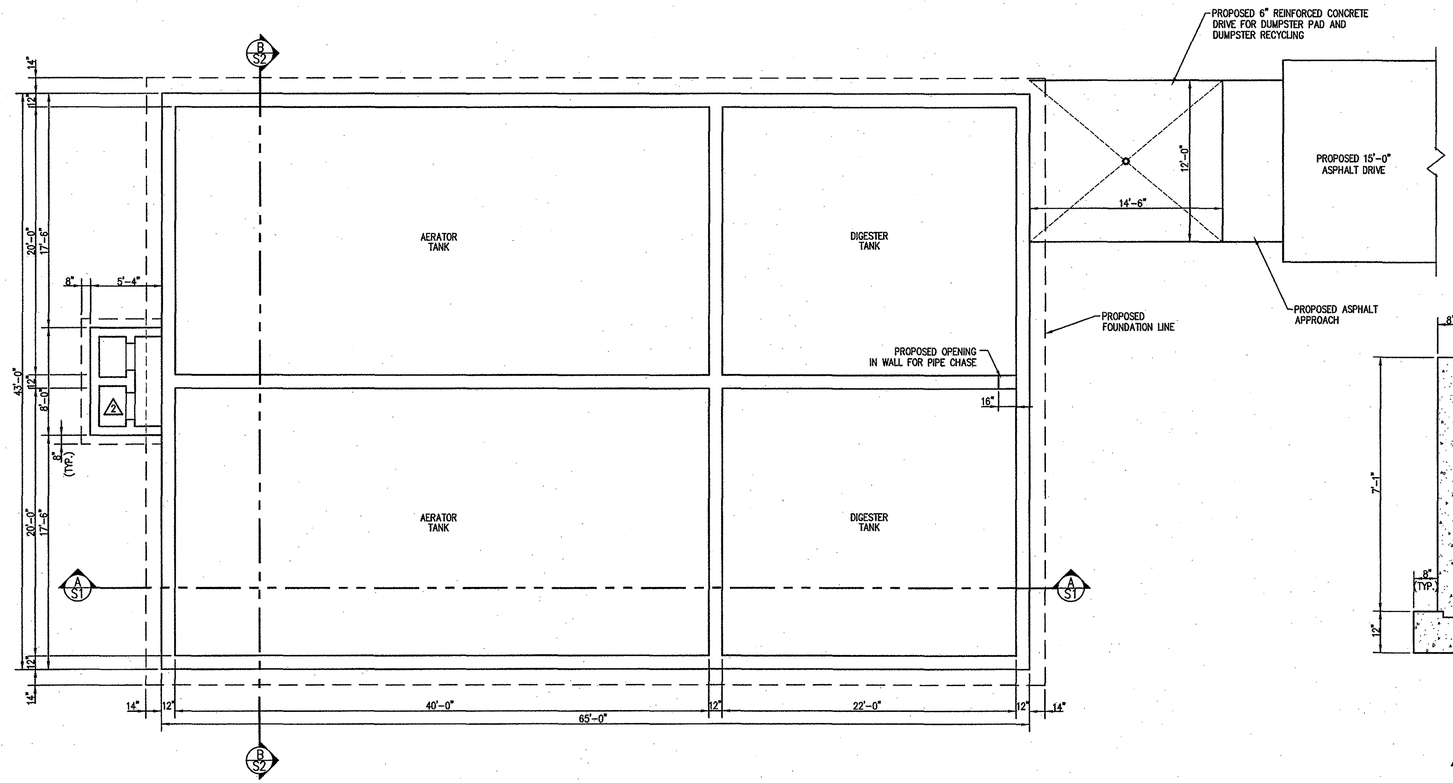

PROPOSED TREATMENT TANK PLAN

SCALE: 3/16" = 1'-0"

NORTH

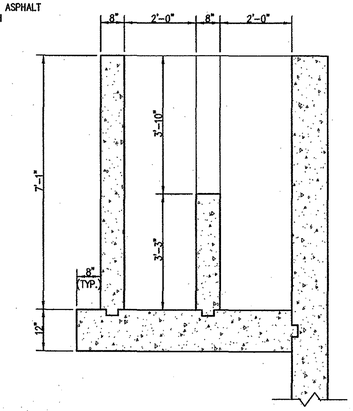

2 SECTION C-C

SCALE: 1/2" = 1'-0"

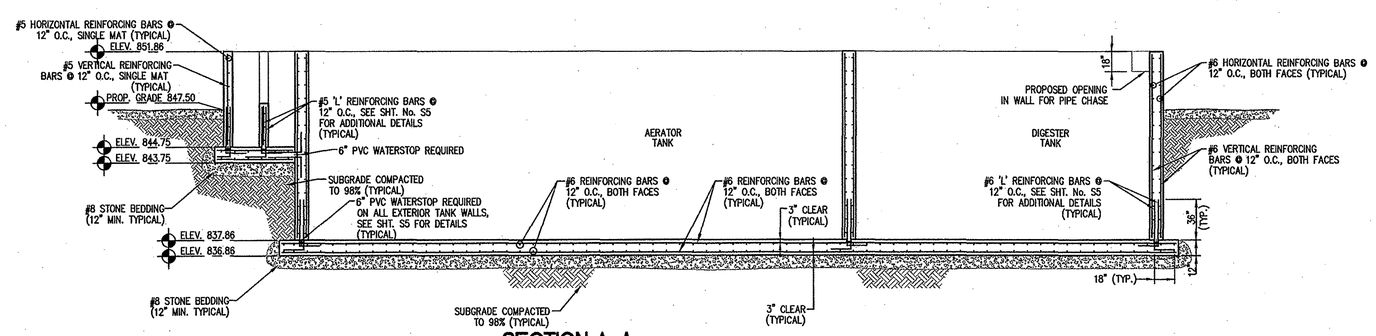

SECTION A-A

SCALE: 3/16" = 1'-0"

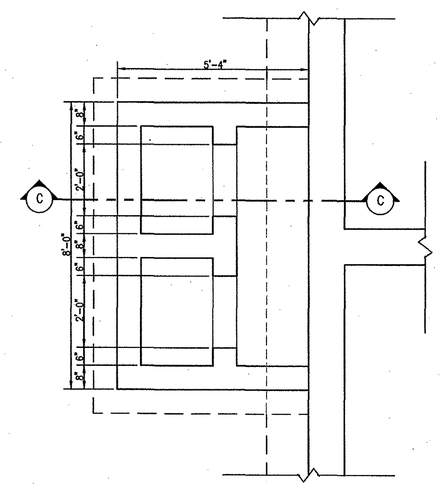

2 PROPOSED FLOW SPLITTER STRUCTURE

SCALE: 1/2" = 1'-0"

GENERAL NOTES:

1. CONTRACTOR TO INSTALL ALL EQUIPMENT IN COMPLETE ACCORDANCE WITH ALL MANUFACTURER'S RECOMMENDATIONS.
2. ALL FASTENERS, SUPPORTS, ETC. TO BE STAINLESS STEEL.
3. REFER TO SPECIFICATIONS FOR FURTHER INFORMATION.
4. ALL CONCRETE TO BE MINIMUM F'c = 4000 PSI. ALL REINFORCING STEEL TO BE MINIMUM Fy = 60,000 PSI.
5. SEE STRUCTURAL DETAIL SHEET AND ELECTRICAL/MECHANICAL SHEETS FOR FURTHER DETAIL.
6. SEE PLANT CONTROL/MONITOR SPECIFICATIONS FOR NECESSARY EQUIPMENT COORDINATION.
7. SEE DETAIL SHEET FOR TYPICAL WALL PENETRATION DETAILS.
8. ALL FERROUS METAL SURFACES TO BE PREPARED AND PAINTED IN ACCORDANCE WITH THE SPECIFICATIONS.
9. SEE DETAIL SHEET FOR GRATING DETAILS.
10. CONTRACTOR TO COORDINATE WITH ALL OTHER APPLICABLE PLAN SHEETS AND SPECIFICATIONS.
11. CONTRACTOR RESPONSIBLE FOR TRANSFERRING ALL SUITABLE TREATMENT MATERIAL FROM EXISTING TANKS TO THE PROPOSED TANKS.
12. CONTRACTOR TO VERIFY EQUIPMENT MOUNTING ELEVATIONS AND DIMENSIONS PRIOR TO CONSTRUCTION.
13. CONTRACTOR IS TO VISIT THE SITE PRIOR TO CONSTRUCTION IN ORDER TO IDENTIFY ANY EXISTING CONFLICTS TO BE ADDRESSED.

CONSULTANT:

REVISIONS:

DATE	DESCRIPTION	BY
5/17/13	PROJECT REVISIONS	JRN
8/01/13	2 ADDED FLOW SPLITTER STRUCTURE	D.A.P.

APPROVED BY:

JAMES W. FRAZELL REGISTERED No. 17208 STATE OF INDIANA PROFESSIONAL ENGINEER 8/2/13

THIS DRAWING AND THE IDEAS, DESIGNS AND CONCEPTS CONTAINED HEREIN ARE THE EXCLUSIVE INTELLECTUAL PROPERTY OF TRIAD ASSOCIATES, INC., AND ARE NOT TO BE USED OR REPRODUCED, IN WHOLE OR IN PART, WITHOUT THE WRITTEN CONSENT OF TRIAD ASSOCIATES, INC.

TRIAD ASSOCIATES INC.
5835 LAWTON LOOP EAST DRIVE
INDIANAPOLIS, INDIANA 46216
PHONE: 317-377-5230 FAX: 317-377-5241

DESIGNED FOR:

THE TOWN OF SWEETSER
GRANT COUNTY, INDIANA

SHEET TITLE:

PROPOSED TREATMENT TANK STRUCTURAL PLAN AND SECTION

JOB NUMBER: 201115D	
SCALE: AS NOTED	CHECKED BY: M.P.H.
PLOT SCALE: 1=64	PLOT DATE: 08/01/13
DRAWN BY: D.A.P.	DATE: MAY, 2013
DESIGNED BY: James W. Frazell, P.E.	
DRAWING NAME: 201115D-TankStruc1REV2	

SHEET No.

S1

RE-DESIGN SET 06-17-13

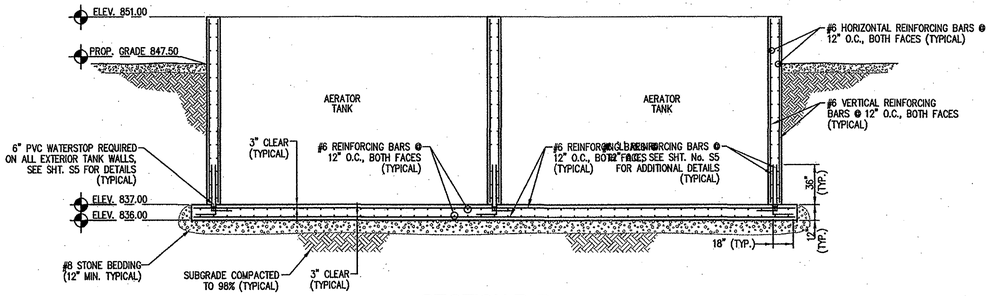

SECTION B-B

SCALE: 3/16" = 1'-0"

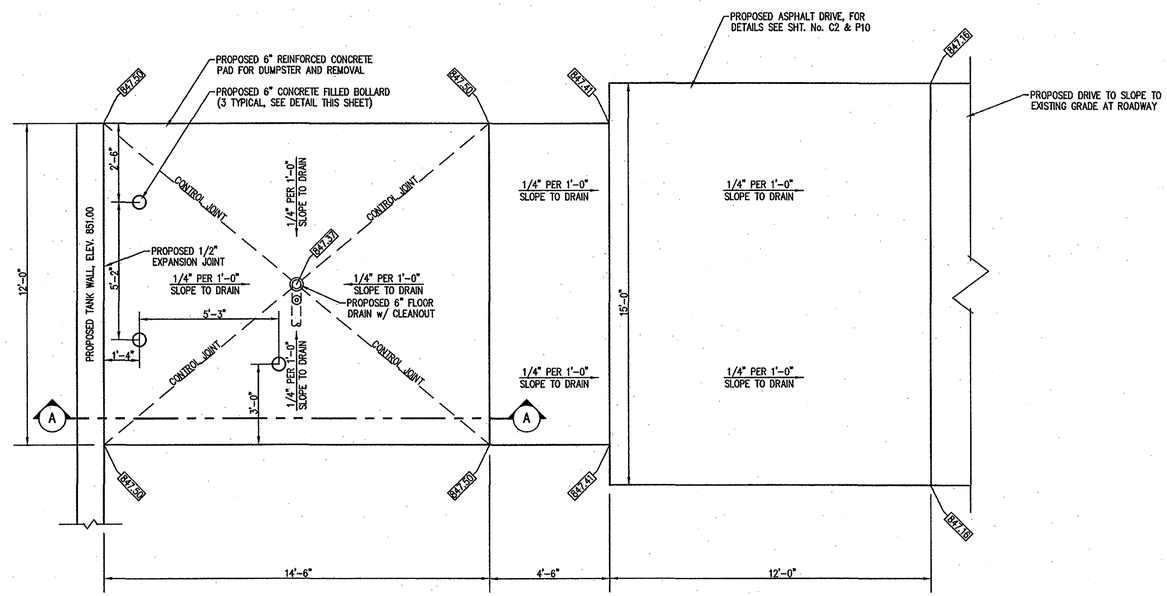

DUMPSTER PAD DETAIL

SCALE: 3/8" = 1'-0"

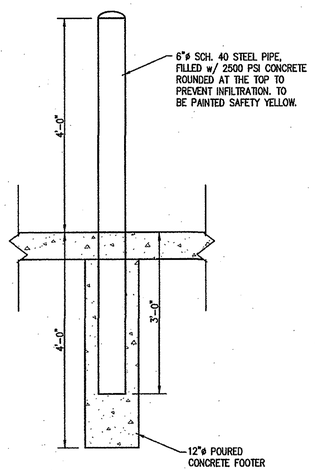

BOLLARD DETAIL

NOT TO SCALE

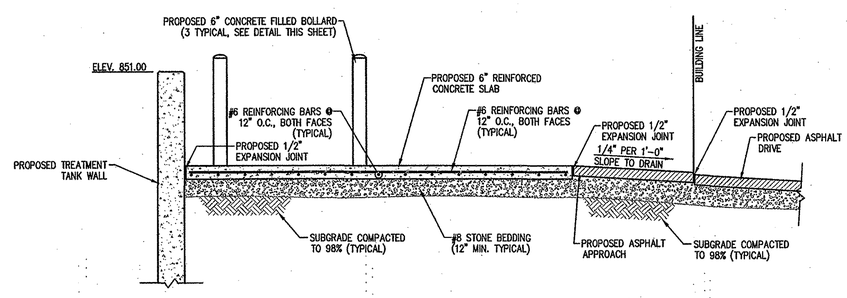

DUMPSTER PAD SECTION

SCALE: 3/8" = 1'-0"

GENERAL NOTES:

1. CONTRACTOR TO INSTALL ALL EQUIPMENT IN COMPLETE ACCORDANCE WITH ALL MANUFACTURER'S RECOMMENDATIONS.
2. ALL FASTENERS, SUPPORTS, ETC. TO BE STAINLESS STEEL.
3. REFER TO SPECIFICATIONS FOR FURTHER INFORMATION.
4. ALL CONCRETE TO BE MINIMUM F'c = 4000 PSI. ALL REINFORCING STEEL TO BE MINIMUM Fy = 60,000 PSI.
5. SEE STRUCTURAL DETAIL SHEET AND ELECTRICAL/MECHANICAL SHEETS FOR FURTHER DETAIL.
6. SEE PLANT CONTROL/MONITOR SPECIFICATIONS FOR NECESSARY EQUIPMENT COORDINATION.
7. SEE DETAIL SHEET FOR TYPICAL WALL PENETRATION DETAILS.
8. ALL FERROUS METAL SURFACES TO BE PREPARED AND PAINTED IN ACCORDANCE WITH THE SPECIFICATIONS.
9. SEE DETAIL SHEET FOR GRATING DETAILS.
10. CONTRACTOR TO COORDINATE WITH ALL OTHER APPLICABLE PLAN SHEETS AND SPECIFICATIONS.
11. CONTRACTOR RESPONSIBLE FOR TRANSFERRING ALL SUITABLE TREATMENT MATERIAL FROM EXISTING TANKS TO THE PROPOSED TANKS.
12. CONTRACTOR TO VERIFY EQUIPMENT MOUNTING ELEVATIONS AND DIMENSIONS PRIOR TO CONSTRUCTION.
13. CONTRACTOR IS TO VISIT THE SITE PRIOR TO CONSTRUCTION IN ORDER TO IDENTIFY ANY EXISTING CONFLICTS TO BE ADDRESSED.

RE-DESIGN SET 06-17-13

CONSULTANT:

REVISIONS:

DATE	DESCRIPTION	BY
5/17/13	PROJECT REVISIONS	JRN

APPROVED BY:

JAMES W. FRAZELL REGISTERED No. 17208 STATE OF INDIANA PROFESSIONAL ENGINEER 6/17/13

THIS DRAWING AND THE IDEAS, DESIGNS AND CONCEPTS CONTAINED HEREIN ARE THE EXCLUSIVE INTELLECTUAL PROPERTY OF TRIAD ASSOCIATES, INC., AND ARE NOT TO BE USED OR REPRODUCED, IN WHOLE OR IN PART, WITHOUT THE WRITTEN CONSENT OF TRIAD ASSOCIATES, INC.

TRIAD ASSOCIATES INC.
5835 LAWTON LOOP EAST DRIVE
INDIANAPOLIS, INDIANA 46216
PHONE: 317-377-5230 FAX: 317-377-5241

DESIGNED FOR:

THE TOWN OF SWEETSER
GRANT COUNTY, INDIANA

SHEET TITLE:

PROPOSED TREATMENT TANK STRUCTURAL SECTION AND DETAILS

JOB NUMBER: 201115D	
SCALE: AS NOTED	CHECKED BY: M.P.H.
PLOT SCALE: 1=64	PLOT DATE: 06/17/13
DRAWN BY: D.A.P.	DATE: MAY, 2013
DESIGNED BY: James W. Frazell, P.E.	
DRAWING NAME: 201115D-TankStruc2REV2	

SHEET No.

S2

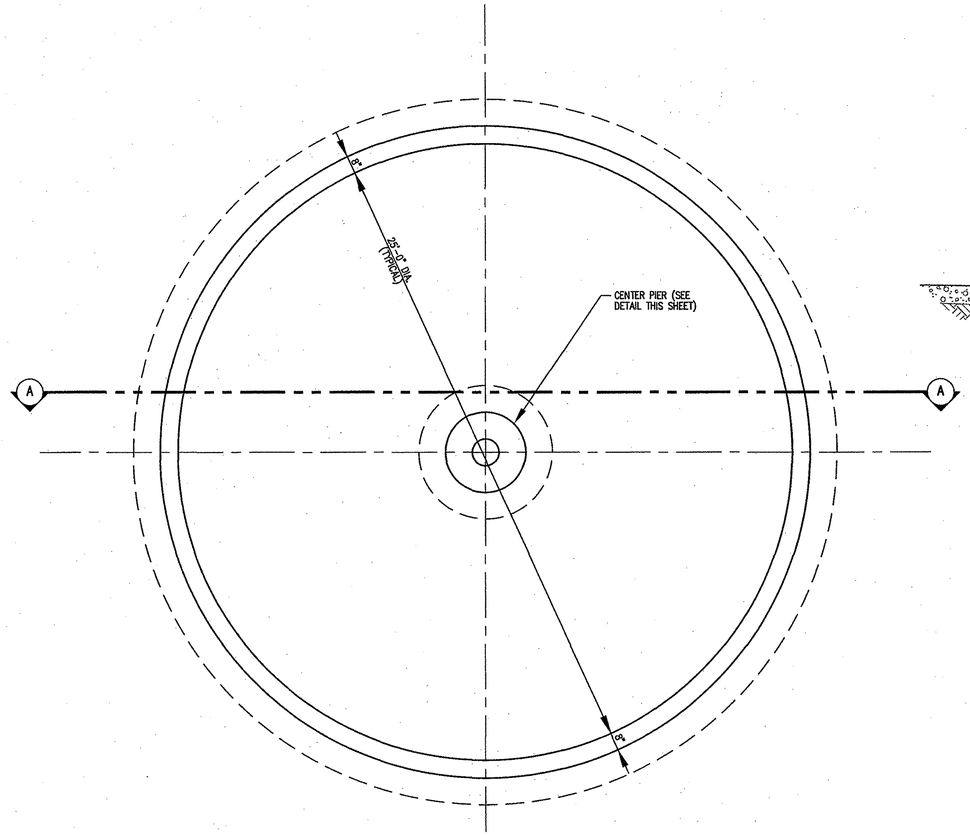

PROPOSED CLARIFIER PLAN VIEW

NOT TO SCALE

NOTE:
COORDINATE SLUDGE HOPPER REINFORCING – SEE CENTER PIER DETAILS THIS SHEET

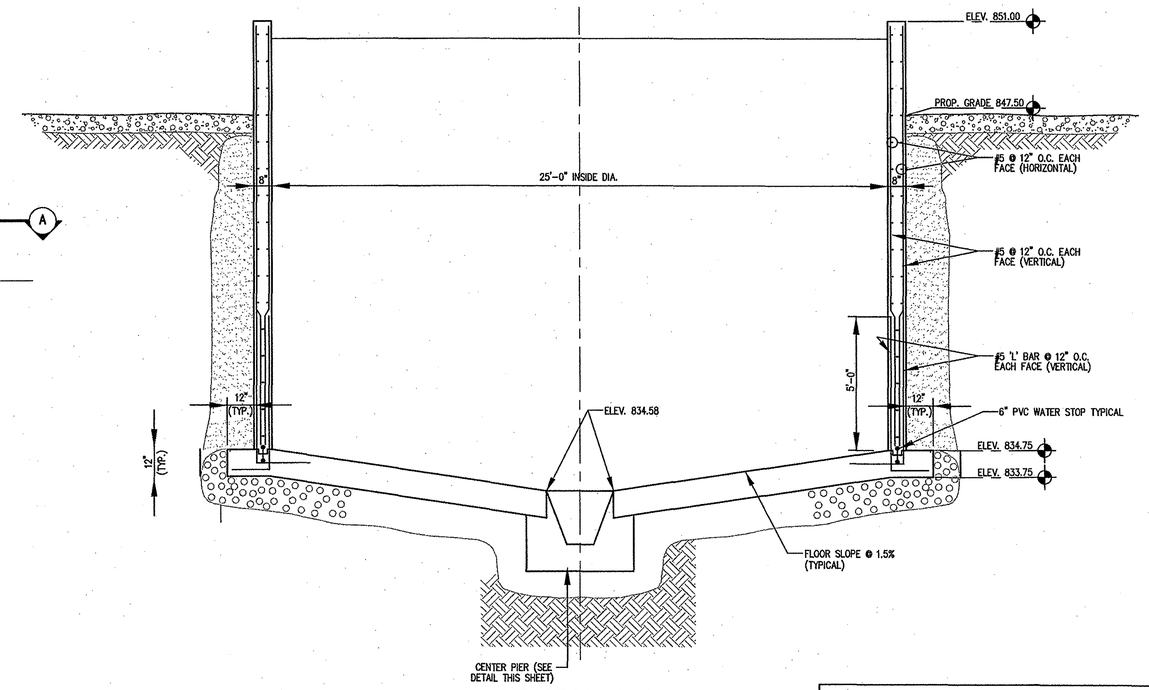

SECTION A-A

NOT TO SCALE

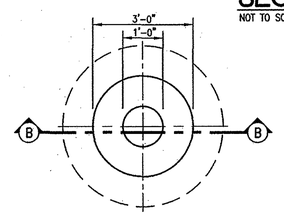

CENTER PIER DETAIL

NOT TO SCALE

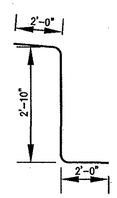

'Z' BAR DETAIL

NOT TO SCALE

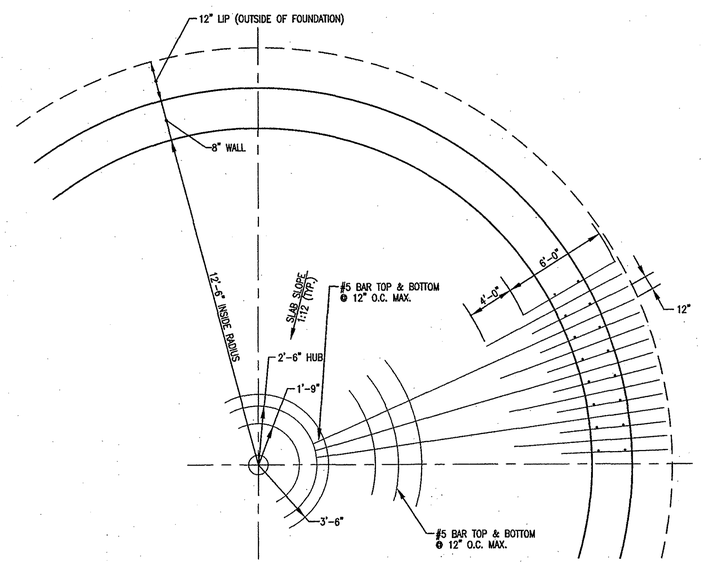

SLAB REINFORCING PLAN

NOT TO SCALE

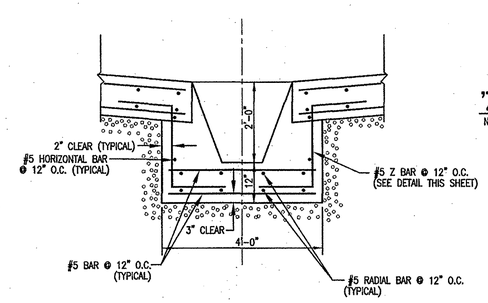

SECTION B-B

NOT TO SCALE

NOTE: CONSULT MANUFACTURER'S DRAWING FOR FINAL DIMENSIONAL DATA

GENERAL NOTES:

1. CONTRACTOR TO INSTALL ALL EQUIPMENT IN COMPLETE ACCORDANCE WITH ALL MANUFACTURER'S RECOMMENDATIONS.
2. ALL FASTENERS, SUPPORTS, ETC. TO BE STAINLESS STEEL.
3. REFER TO SPECIFICATIONS FOR FURTHER INFORMATION.
4. ALL CONCRETE TO BE MINIMUM F'c = 4000 PSI. ALL REINFORCING STEEL TO BE MINIMUM Fy = 60,000 PSI.
5. SEE STRUCTURAL DETAIL SHEET AND ELECTRICAL/MECHANICAL SHEETS FOR FURTHER DETAIL.
6. SEE PLANT CONTROL/MONITOR SPECIFICATIONS FOR NECESSARY EQUIPMENT COORDINATION.
7. SEE DETAIL SHEET FOR TYPICAL WALL PENETRATION DETAILS.
8. ALL FERROUS METAL SURFACES TO BE PREPARED AND PAINTED IN ACCORDANCE WITH THE SPECIFICATIONS.
9. SEE DETAIL SHEET FOR GRATING DETAILS.
10. CONTRACTOR TO COORDINATE WITH ALL OTHER APPLICABLE PLAN SHEETS AND SPECIFICATIONS.
11. CONTRACTOR RESPONSIBLE FOR TRANSFERRING ALL SUITABLE TREATMENT MATERIAL FROM EXISTING TANKS TO THE PROPOSED TANKS.
12. CONTRACTOR TO VERIFY EQUIPMENT MOUNTING ELEVATIONS AND DIMENSIONS PRIOR TO CONSTRUCTION.
13. CONTRACTOR IS TO VISIT THE SITE PRIOR TO CONSTRUCTION IN ORDER TO IDENTIFY ANY EXISTING CONFLICTS TO BE ADDRESSED.

RE-DESIGN SET 06-17-13

CONSULTANT:

REVISIONS:

DATE	DESCRIPTION	BY
5/17/13	PROJECT REVISIONS	JRN

APPROVED BY:

JAMES W. FRAZELL REGISTERED No. 17208 STATE OF INDIANA PROFESSIONAL ENGINEER

6/17/13

THIS DRAWING AND THE IDEAS, DESIGNS AND CONCEPTS CONTAINED HEREIN ARE THE EXCLUSIVE INTELLECTUAL PROPERTY OF TRIAD ASSOCIATES, INC., AND ARE NOT TO BE USED OR REPRODUCED, IN WHOLE OR IN PART, WITHOUT THE WRITTEN CONSENT OF TRIAD ASSOCIATES, INC.

TRIAD ASSOCIATES INC.
5835 LAWTON LOOP EAST DRIVE
INDIANAPOLIS, INDIANA 46216
PHONE: 317-377-5230 FAX: 317-377-5241

DESIGNED FOR:

THE TOWN OF SWEETSER
GRANT COUNTY, INDIANA

SHEET TITLE:

PROPOSED CLARIFIER STRUCTURAL PLAN, SECTION AND DETAILS

JOB NUMBER: 201115D	
SCALE: AS NOTED	CHECKED BY: M.P.H.
PLOT SCALE: 1=32	PLOT DATE: 06/17/13
DRAWN BY: D.A.P.	DATE: MAY, 2013
DESIGNED BY: James W. Frazell, P.E.	
DRAWING NAME: 201115D-ClarStrucREV2	

SHEET No.

S3

GENERAL NOTES:

1. CONTRACTOR TO INSTALL ALL EQUIPMENT IN COMPLETE ACCORDANCE WITH ALL MANUFACTURER'S RECOMMENDATIONS.
2. ALL FASTENERS, SUPPORTS, ETC. TO BE STAINLESS STEEL.
3. REFER TO SPECIFICATIONS FOR FURTHER INFORMATION.
4. ALL CONCRETE TO BE MINIMUM F'c = 4000 PSI. ALL REINFORCING STEEL TO BE MINIMUM Fy = 60,000 PSI.
5. SEE STRUCTURAL DETAIL SHEET AND ELECTRICAL/MECHANICAL SHEETS FOR FURTHER DETAIL.
6. SEE PLANT CONTROL/MONITOR SPECIFICATIONS FOR NECESSARY EQUIPMENT COORDINATION.
7. SEE DETAIL SHEET FOR TYPICAL WALL PENETRATION DETAILS.
8. ALL FERROUS METAL SURFACES TO BE PREPARED AND PAINTED IN ACCORDANCE WITH THE SPECIFICATIONS.
9. SEE DETAIL SHEET FOR GRATING DETAILS.
10. CONTRACTOR TO COORDINATE WITH ALL OTHER APPLICABLE PLAN SHEETS AND SPECIFICATIONS.
11. CONTRACTOR RESPONSIBLE FOR TRANSFERRING ALL SUITABLE TREATMENT MATERIAL FROM EXISTING TANKS TO THE PROPOSED TANKS.
12. CONTRACTOR TO VERIFY EQUIPMENT MOUNTING ELEVATIONS AND DIMENSIONS PRIOR TO CONSTRUCTION.
13. CONTRACTOR IS TO VISIT THE SITE PRIOR TO CONSTRUCTION IN ORDER TO IDENTIFY ANY EXISTING CONFLICTS TO BE ADDRESSED.

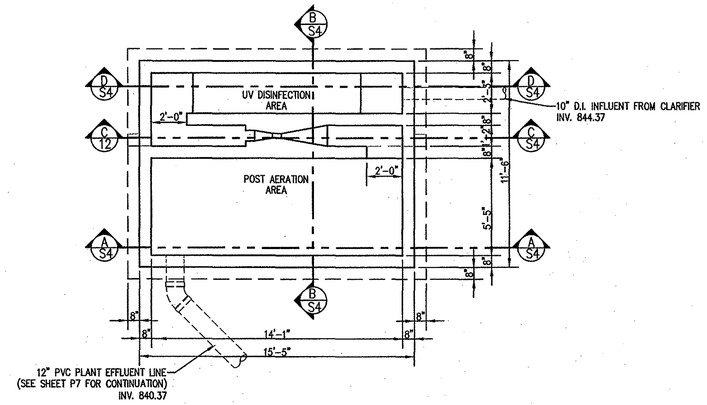

U.V./REAERATION STRUCTURE PLAN VIEW

SCALE: 1/4"= 1'-0"

GENERAL NOTES:

1. CONTRACTOR TO INSTALL ALL EQUIPMENT IN COMPLETE ACCORDANCE WITH ALL MANUFACTURER'S RECOMMENDATIONS.
2. ALL FASTENERS, SUPPORTS, ETC. TO BE STAINLESS STEEL.
3. REFER TO SPECIFICATIONS FOR FURTHER INFORMATION.
4. ALL CONCRETE TO BE MINIMUM F'c = 4000 PSI. ALL REINFORCING STEEL TO BE MINIMUM Fy = 60,000 PSI.
5. SEE STRUCTURAL DETAIL SHEET S5 AND ELECTRICAL/MECHANICAL SHEETS FOR FURTHER DETAIL.
6. SEE DETAIL SHEET P9 FOR TYPICAL WALL PENETRATION DETAILS.
7. ALL FERROUS METAL SURFACES TO BE PREPARED AND PAINTED IN ACCORDANCE WITH THE SPECIFICATIONS.
8. SEE DETAIL SHEET P10 FOR GRATING DETAILS.
9. CONTRACTOR TO COORDINATE WITH ALL OTHER APPLICABLE PLAN SHEETS AND SPECIFICATIONS.
10. CONTRACTOR RESPONSIBLE FOR TRANSFERRING ALL SUITABLE TREATMENT MATERIAL FROM EXISTING TANKS TO THE PROPOSED TANKS.
11. CONTRACTOR TO VERIFY EQUIPMENT MOUNTING ELEVATIONS AND DIMENSIONS PRIOR TO CONSTRUCTION.
12. CONTRACTOR SHALL CHAMFER ALL UPPER EDGES OF TANK FOR DETAIL SEE SHEET S5.

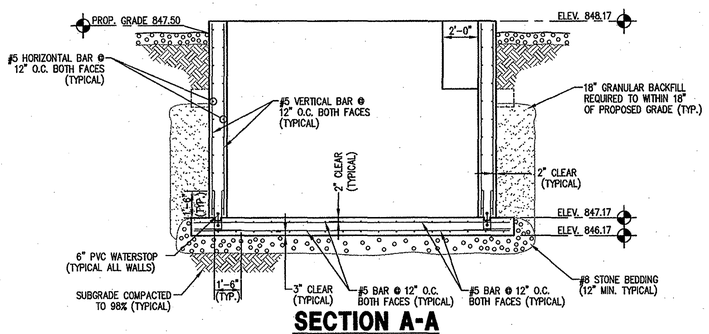

SECTION A-A

SCALE: 1/4"= 1'-0"

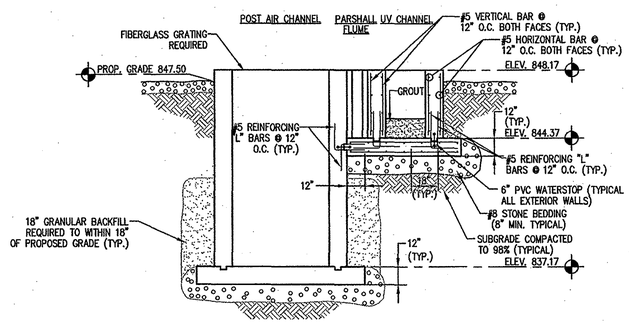

SECTION B-B

SCALE: 1/4"= 1'-0"

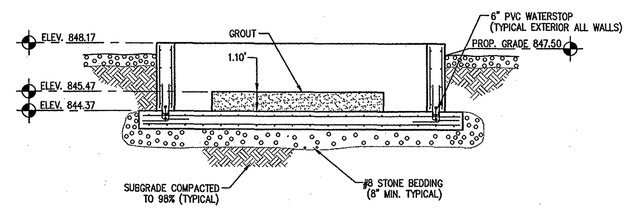

SECTION D-D

SCALE: 1/4"= 1'-0"

REINFORCING TYPICAL ALL SECTIONS (SEE SHEET No. S5 FOR FURTHER DETAILS AND INSTRUCTIONS)

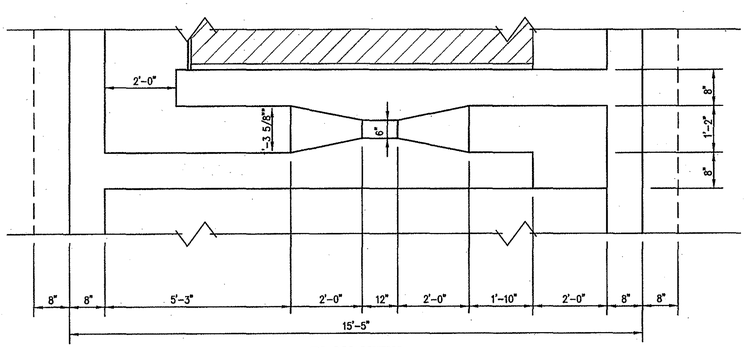

PLAN VIEW

SCALE: 1/2"= 1'-0"

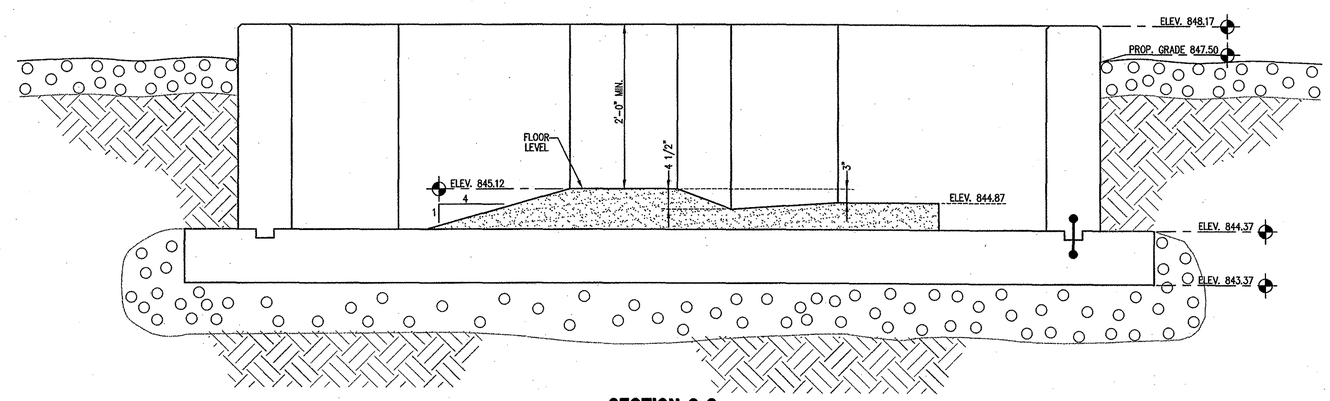

SECTION C-C

SCALE: 3/4"= 1'-0"

PARSHALL FLUME DETAILS

RE-DESIGN SET 06-17-13

CONSULTANT:

REVISIONS:

DATE	DESCRIPTION	BY
5/17/13	PROJECT REVISIONS	JRN

APPROVED BY:

JAMES W. FRAZELL REGISTERED No. 17208 STATE OF INDIANA PROFESSIONAL ENGINEER

4/2/13

THIS DRAWING AND THE IDEAS, DESIGNS AND CONCEPTS CONTAINED HEREIN ARE THE EXCLUSIVE INTELLECTUAL PROPERTY OF TRIAD ASSOCIATES, INC., AND ARE NOT TO BE USED OR REPRODUCED, IN WHOLE OR IN PART, WITHOUT THE WRITTEN CONSENT OF TRIAD ASSOCIATES, INC.

TRIAD ASSOCIATES INC.
5835 LAWTON LOOP EAST DRIVE
INDIANAPOLIS, INDIANA 46216
PHONE: 317-377-5230 FAX: 317-377-5241

DESIGNED FOR:

THE TOWN OF SWEETSER
GRANT COUNTY, INDIANA

SHEET TITLE:

PROPOSED POST-AERATION, ULTRA VIOLET DISINFECTION AND METERING STRUCTURE STRUCTURAL PLAN AND SECTIONS

JOB NUMBER: 201115D	
SCALE: AS NOTED	CHECKED BY: M.P.H.
PLOT SCALE: 1=48	PLOT DATE: 06/17/13
DRAWN BY: D.A.P.	DATE: MAY, 2013
DESIGNED BY: James W. Frazell, P.E.	
DRAWING NAME: 201115D-UVStrucREV2	

SHEET No.

S4

GENERAL NOTES

1. REINFORCING DETAILS SHOWN REPRESENT MINIMUM REQUIREMENTS. ALTERNATE BUT EQUAL METHODS ARE ACCEPTABLE, BUT THEY SHALL NOT BE USED WITHOUT PRIOR APPROVAL BY THE ENGINEER.
2. "L" REPRESENTS THE MINIMUM DEVELOPMENT LENGTHS ACCORDING TO ACI 318, BASED ON GRADE 60 STEEL REINFORCING AND 4,000 PSI (211 kg/sm) 28-DAY CONCRETE.
3. ALL DOWELS SHALL BE THE SAME SIZE AND SPACING AS THE BARS THAT ARE BEING DOWELLED OR AS SHOWN ELSEWHERE ON THE DRAWINGS.
4. THE REINFORCING DETAILS SHOWN ON THIS DRAWING ARE INTENDED TO ESTABLISH BASIC REINFORCING REQUIREMENTS FOR VARIOUS GENERAL TYPES OF HORIZONTAL AND VERTICAL JOINTS IN REINFORCED CONCRETE STRUCTURES. DETAILS DESIGNATED AS "PLAN" ARE HORIZONTAL JOINTS AND DETAILS DESIGNATED AS "SECTION" ARE VERTICAL JOINTS. OTHER DETAILS ARE SELF-EXPLANATORY. WHEN A CONDITION EXISTS IN A STRUCTURE THAT CONFORMS TO ONE OF THESE DETAILS, THE REINFORCING REQUIREMENTS SHOWN ON THE APPLICABLE DETAIL SHALL BE INCORPORATED INTO THE STRUCTURE UNLESS THE CONDITION IS SPECIFICALLY DETAILED ELSEWHERE ON THE DRAWINGS.
5. THE FOLLOWING CONCRETE COVER SHALL BE PROVIDED FOR REINFORCEMENT UNLESS OTHERWISE INDICATED:
   - A) CONCRETE CAST AGAINST AND PERMANENTLY EXPOSED TO EARTH: 3 IN. (BOTTOM MAT AND SIDES OF SLABS OR OTHER CONCRETE CAST AGAINST THE EARTH).
   - B) CONCRETE EXPOSED TO EARTH, WEATHER OR FLUID SURFACES: 2 IN. (TANK WALLS, BEAMS, SLABS, COLUMNS).
   - C) CONCRETE NOT EXPOSED TO EARTH IN CONTACT WITH GROUND: 1 1/2 IN.
6. AN UNDIMENSIONED BEND REPRESENTS A STANDARD HOOK.
7. WHERE ONE GRID OF REINFORCING IS REQUIRED IN A WALL OR SLAB THE GRID SHALL BE CENTERED IN THE ELEMENT, UNLESS OTHERWISE LOCATED ON THE PLANS WITH A CLEAR DISTANCE TO EITHER SIDE OF THE ELEMENT.
8. ALL REINFORCING SPLICES TO MEET ACI REQUIREMENTS.

NOTES:

1. REINFORCE EACH FACE AS SHOWN FOR 12" (30.48 cm) OR GREATER WALLS OR SLABS. REINFORCE IN CENTER FOR WALLS OR SLABS LESS THAN 12" (30.48 cm) THICK.
2. MAXIMUM "A" FOR WALLS = 4'-0" (1.22 m). MAXIMUM "A" & "B" FOR SLABS = 4'-0" (1.22 m). LARGER OPENINGS REQUIRE SPECIAL TREATMENT.

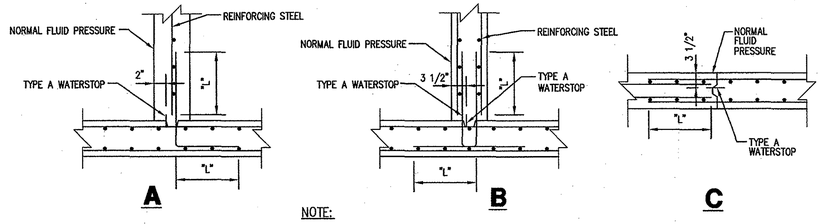

NOTE:
1. DETAILS APPLY FOR HORIZONTAL OR VERTICAL JOINTS.

WATERPROOF CONSTRUCTION JOINT DETAILS

NOT TO SCALE

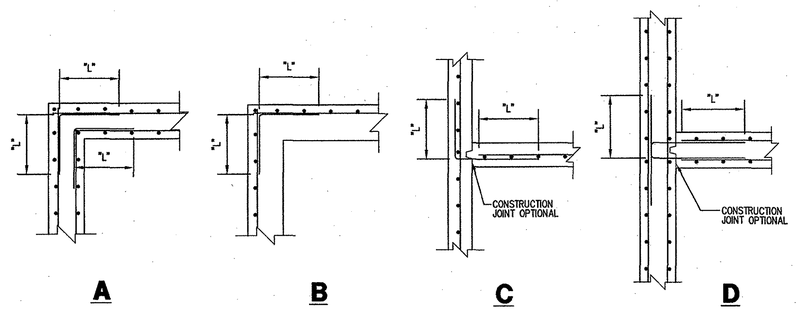

HORIZONTAL REINFORCING CORNER DETAILS

NOT TO SCALE

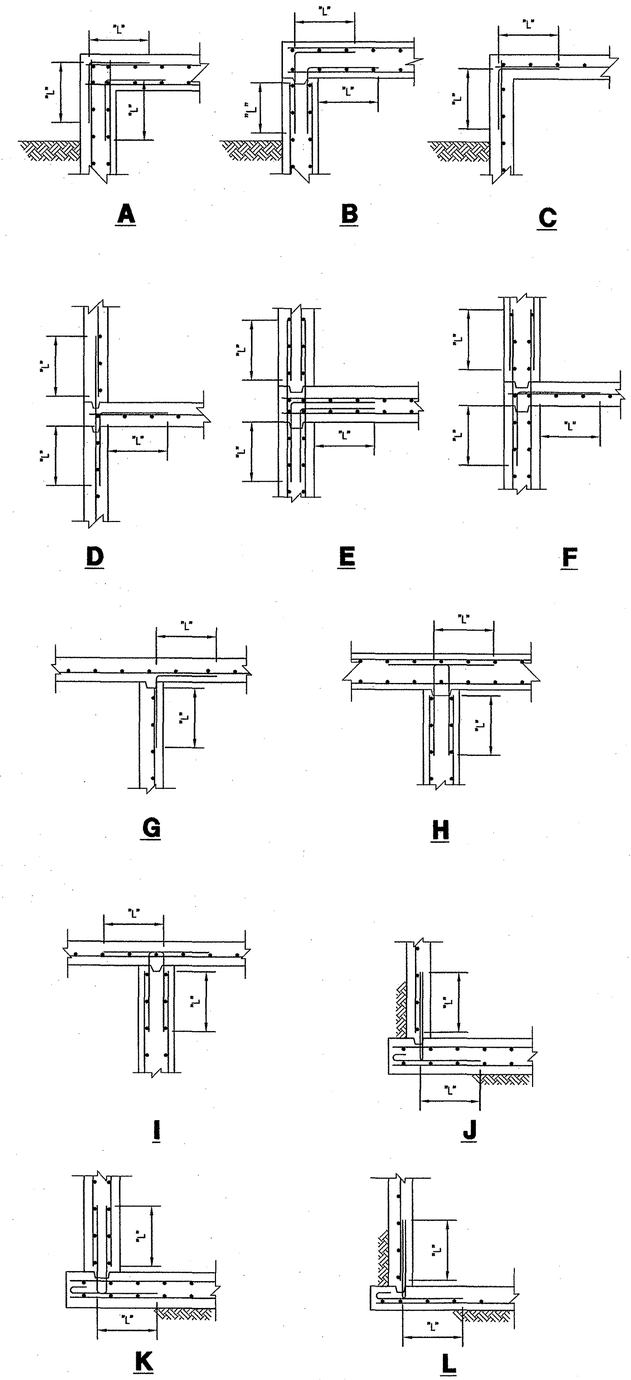

VERTICAL REINFORCING CORNER DETAILS

NOT TO SCALE

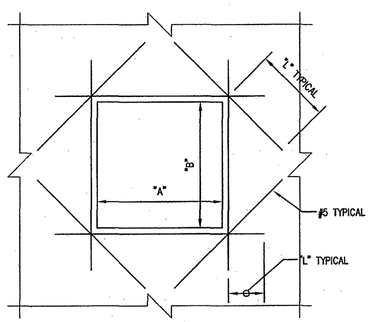

WALL OR SLAB OPENING DETAIL

NOT TO SCALE

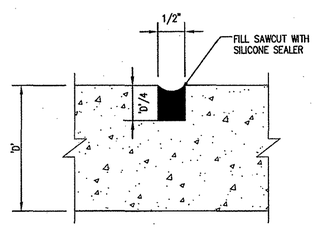

NOTES:

MATERIALS SHALL BE AS DESCRIBED IN THE DETAILED SPECIFICATIONS.

"W" SHALL BE AS SHOWN ELSEWHERE ON THE DRAWINGS, IF NOT "W" SHALL BE 1/3".

DETAIL APPLIES TO HORIZONTAL AND VERTICAL JOINTS.

W	D	D (MIN.)
1/2"	W	< 1/4"
1/2"	W/2	> 1/2"

SLAB CONTROL JOINT COMPOSITION

NOT TO SCALE

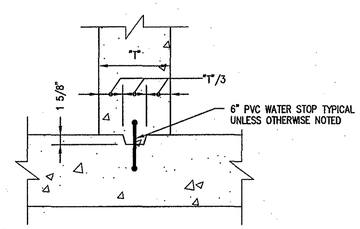

KEYWAY DETAIL

NOT TO SCALE

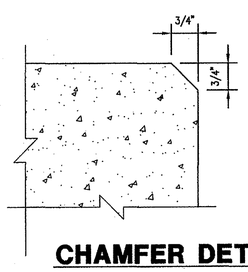

CHAMFER DETAIL

NOT TO SCALE

NOTE:

1. EXPOSED CORNER DETAIL SHALL BE USED ON ALL EXPOSED EDGES UNLESS OTHERWISE NOTED

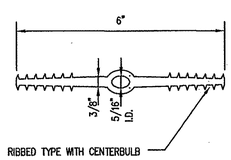

TYPE A WATERSTOP

NOT TO SCALE

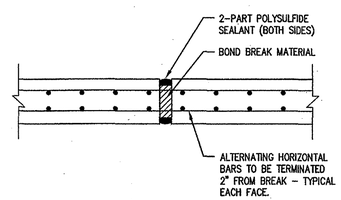

TYPICAL WALL CONTROL JOINT

NOT TO SCALE

RE-DESIGN SET 06-17-13

CONSULTANT:

REVISIONS:

DATE	DESCRIPTION	BY
5/17/13	PROJECT REVISIONS	JRN

APPROVED BY:

JAMES W. FRAZELL REGISTERED No. 17208 STATE OF INDIANA PROFESSIONAL ENGINEER 6/17/13

THIS DRAWING AND THE IDEAS, DESIGNS AND CONCEPTS CONTAINED HEREIN ARE THE EXCLUSIVE INTELLECTUAL PROPERTY OF TRIAD ASSOCIATES, INC., AND ARE NOT TO BE USED OR REPRODUCED, IN WHOLE OR IN PART, WITHOUT THE WRITTEN CONSENT OF TRIAD ASSOCIATES, INC.

TRIAD ASSOCIATES INC.
5835 LAWTON LOOP EAST DRIVE
INDIANAPOLIS, INDIANA 46216
PHONE: 317-377-5230 FAX: 317-377-5241

DESIGNED FOR:

THE TOWN OF SWEETSER
GRANT COUNTY, INDIANA

SHEET TITLE:

PROPOSED STRUCTURAL DETAILS

JOB NUMBER: 201115D	
SCALE: AS NOTED	CHECKED BY: M.P.H.
PLOT SCALE: 1=1	PLOT DATE: 06/17/13
DRAWN BY: D.A.P.	DATE: MAY, 2013
DESIGNED BY: James W. Frazell, P.E.	
DRAWING NAME: 201115D-StrDetREV2	

SHEET No.

S5

PROJECT KEYNOTES:

1. PROPOSED 3" D.I. RAS/WAS RETURN LINE. CONTRACTOR IS TO FABRICATE PIPE SUPPORT ANCHORS, TO BE INSTALLED @ 4'-0" O.C. ALONG LENGTH OF WALL
2. PROPOSED INFLUENT FROM SPLITTER BOX TO AERATION TANK
3. PROPOSED RAS/WAS FLOW CONTROL BOX (SEE SHT. No. P4 FOR DETAILS)
4. PROPOSED LINK-SEAL REQUIRED (SEE SHT. No. P9 FOR DETAILS)
5. PROPOSED 12" PLUG VALVE w/ HANDWHEEL OPERATION FROM WALKWAY
6. PROPOSED 12" D.I. TRANSFER PIPE BETWEEN TANKS
7. PROPOSED FINE BUBBLE MEMBRANE DIFFUSER DISC, TYPICAL OF BOTH AERATION TANKS (SEE SPECIFICATIONS FOR MORE INFORMATION)
8. PROPOSED 4" BUTTERFLY VALVE
9. PROPOSED 4" D.I. UNLINED AIR HEADER. CONTRACTOR IS TO FABRICATE PIPE SUPPORT ANCHORS, TO BE INSTALLED @ 4'-0" O.C. ALONG LENGTH OF WALL
10. PROPOSED 10" D.I. AERATOR TANK EFFLUENT PIPE
11. PROPOSED ALUM CHEMICAL FEED CONCRETE PAD (FOR EQUIPMENT DETAIL, SEE SHT. No. P9)

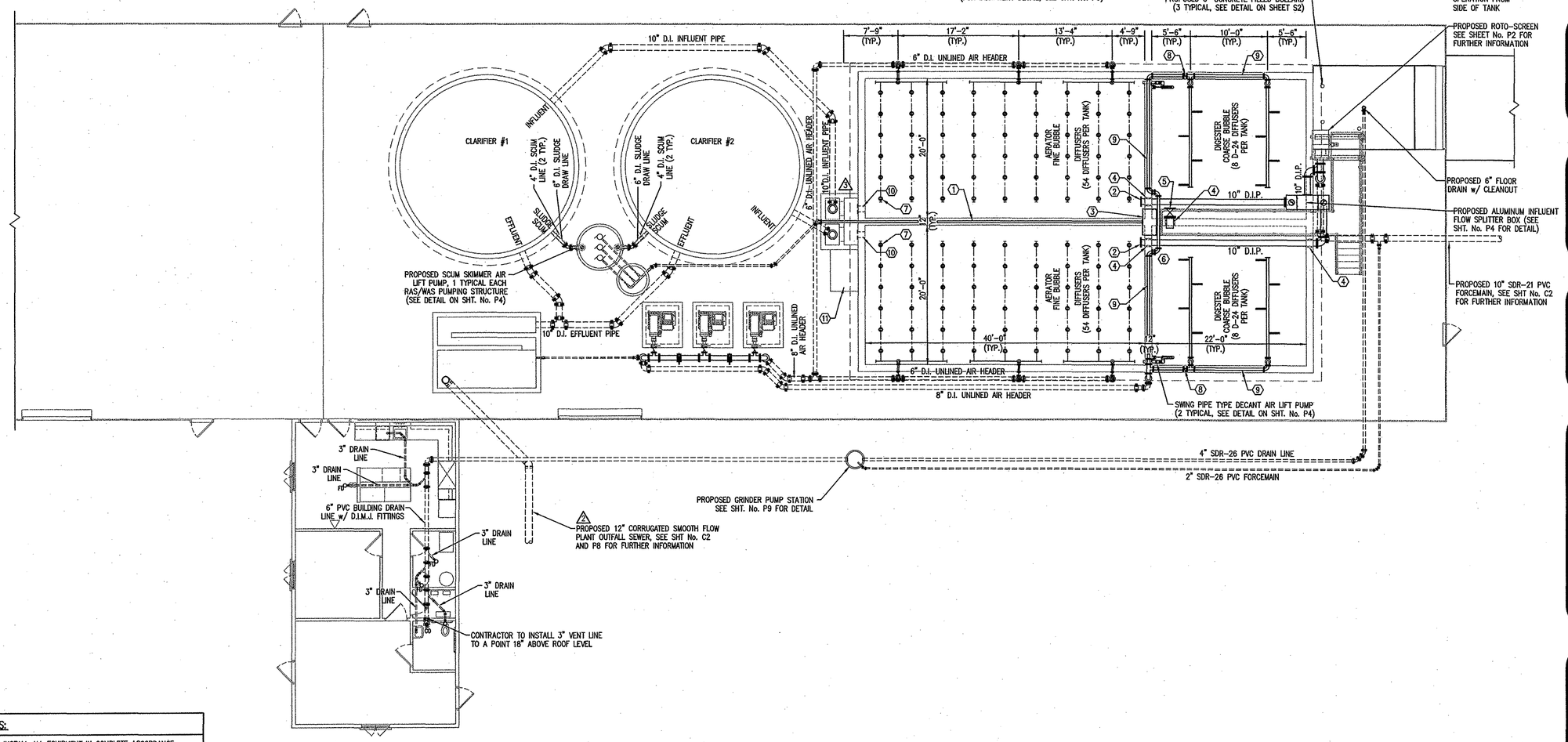

PROPOSED PLANT PIPING

SCALE: 1/8" = 1'-0"

NORTH

GENERAL NOTES:

1. CONTRACTOR TO INSTALL ALL EQUIPMENT IN COMPLETE ACCORDANCE WITH ALL MANUFACTURER'S RECOMMENDATIONS.
2. ALL FASTENERS, SUPPORTS, ETC. TO BE STAINLESS STEEL.
3. REFER TO SPECIFICATIONS FOR FURTHER INFORMATION.
4. ALL CONCRETE TO BE MINIMUM F'c = 4000 PSI. ALL REINFORCING STEEL TO BE MINIMUM Fy = 60,000 PSI.
5. SEE STRUCTURAL DETAIL SHEET AND ELECTRICAL/MECHANICAL SHEETS FOR FURTHER DETAIL.
6. SEE PLANT CONTROL/MONITOR SPECIFICATIONS FOR NECESSARY EQUIPMENT COORDINATION.
7. SEE DETAIL SHEET FOR TYPICAL WALL PENETRATION DETAILS.
8. ALL FERROUS METAL SURFACES TO BE PREPARED AND PAINTED IN ACCORDANCE WITH THE SPECIFICATIONS.
9. SEE DETAIL SHEET FOR GRATING DETAILS.
10. CONTRACTOR TO COORDINATE WITH ALL OTHER APPLICABLE PLAN SHEETS AND SPECIFICATIONS.
11. CONTRACTOR RESPONSIBLE FOR TRANSFERRING ALL SUITABLE TREATMENT MATERIAL FROM EXISTING TANKS TO THE PROPOSED TANKS.
12. CONTRACTOR TO VERIFY EQUIPMENT MOUNTING ELEVATIONS AND DIMENSIONS PRIOR TO CONSTRUCTION.
13. CONTRACTOR IS TO VISIT THE SITE PRIOR TO CONSTRUCTION IN ORDER TO IDENTIFY ANY EXISTING CONFLICTS TO BE ADDRESSED.

RE-DESIGN SET 06-17-13

CONSULTANT:

REVISIONS:

DATE	DESCRIPTION	BY
5/17/13	PROJECT REVISIONS	JRN
8/01/13	2 REVISED PIPE TYPE	D.A.P.
8/01/13	3 ADDED FLOW SPLITTER STRUCTURE	D.A.P.

APPROVED BY:

JAMES W. FRAZELL REGISTERED No. 17208 STATE OF INDIANA PROFESSIONAL ENGINEER 8/2/13

THIS DRAWING AND THE IDEAS, DESIGNS AND CONCEPTS CONTAINED HEREIN ARE THE EXCLUSIVE INTELLECTUAL PROPERTY OF TRIAD ASSOCIATES, INC., AND ARE NOT TO BE USED OR REPRODUCED, IN WHOLE OR IN PART, WITHOUT THE WRITTEN CONSENT OF TRIAD ASSOCIATES, INC.

TRIAD ASSOCIATES INC.
5835 LAWTON LOOP EAST DRIVE
INDIANAPOLIS, INDIANA 46216
PHONE: 317-377-5230 FAX: 317-377-5241

DESIGNED FOR:

THE TOWN OF SWEETSER
GRANT COUNTY, INDIANA

SHEET TITLE:

PROPOSED PLANT PIPING PLAN

JOB NUMBER: 201115D	
SCALE: AS NOTED	CHECKED BY: M.P.H.
PLOT SCALE: 1=64	PLOT DATE: 08/01/13
DRAWN BY: D.A.P.	DATE: MAY, 2013
DESIGNED BY: James W. Frazell, P.E.	
DRAWING NAME: 201115D-PipingREV2	

SHEET No.

P1

NOTE:

CONTRACTOR IS TO FABRICATE A REMOVABLE EFFLUENT WASTE EXTENSION PLATE SUITABLE TO REACH FROM ROTO SCREEN TO DUMPSTER LOCATION.

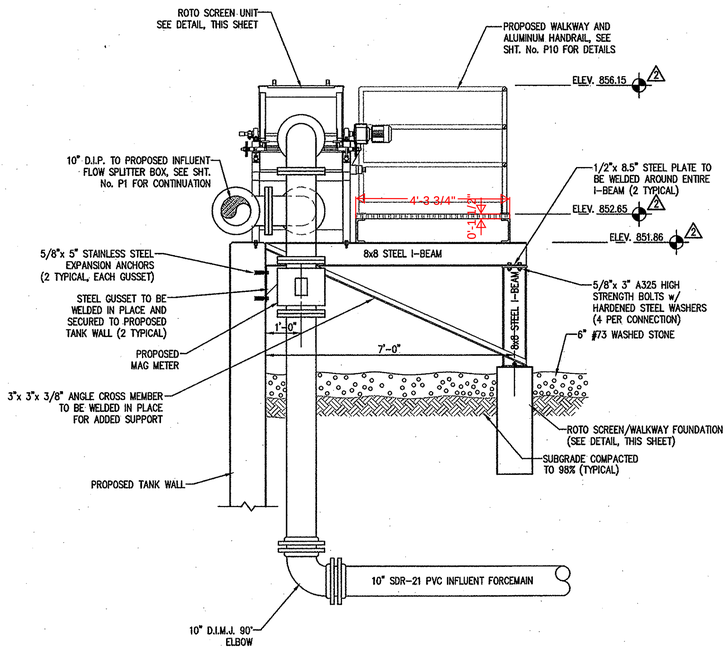

ROTO SCREEN/WALKWAY ELEVATIONS

SCALE: 1/2" = 1'-0"

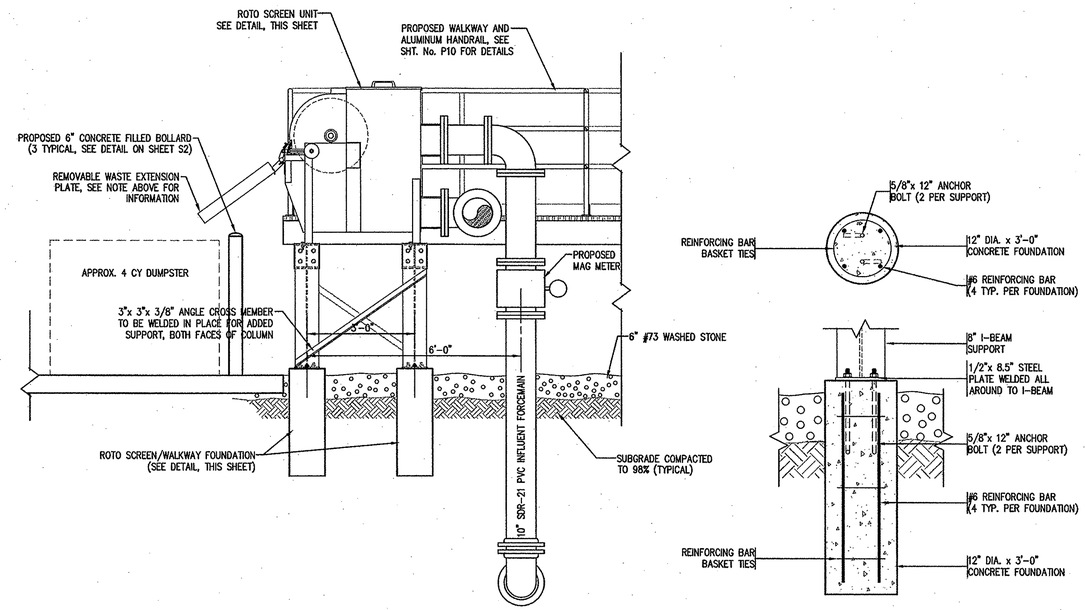

ROTO SCREEN/WALKWAY SUPPORT FOUNDATION DETAIL

NOT TO SCALE

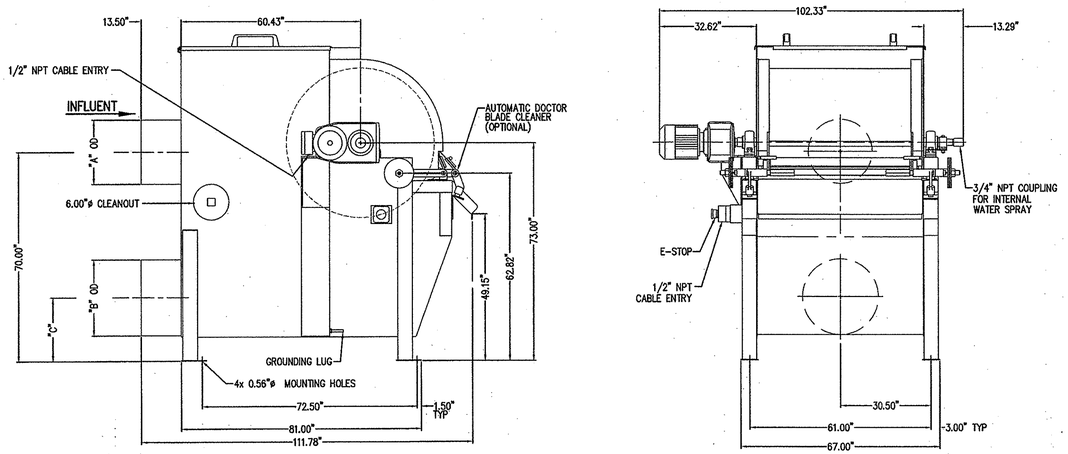

ROTO SCREEN MANUFACTURERS DIMENSIONS

SCALE: 1/2" = 1'-0"

GENERAL NOTES:

1. CONTRACTOR TO INSTALL ALL EQUIPMENT IN COMPLETE ACCORDANCE WITH ALL MANUFACTURER'S RECOMMENDATIONS.
2. ALL FASTENERS, SUPPORTS, ETC. TO BE STAINLESS STEEL.
3. REFER TO SPECIFICATIONS FOR FURTHER INFORMATION.
4. ALL CONCRETE TO BE MINIMUM F'c = 4000 PSI. ALL REINFORCING STEEL TO BE MINIMUM Fy = 60,000 PSI.
5. SEE STRUCTURAL DETAIL SHEET AND ELECTRICAL/MECHANICAL SHEETS FOR FURTHER DETAIL.
6. SEE PLANT CONTROL/MONITOR SPECIFICATIONS FOR NECESSARY EQUIPMENT COORDINATION.
7. SEE DETAIL SHEET FOR TYPICAL WALL PENETRATION DETAILS.
8. ALL FERROUS METAL SURFACES TO BE PREPARED AND PAINTED IN ACCORDANCE WITH THE SPECIFICATIONS.
9. SEE DETAIL SHEET FOR GRATING DETAILS.
10. CONTRACTOR TO COORDINATE WITH ALL OTHER APPLICABLE PLAN SHEETS AND SPECIFICATIONS.
11. CONTRACTOR RESPONSIBLE FOR TRANSFERRING ALL SUITABLE TREATMENT MATERIAL FROM EXISTING TANKS TO THE PROPOSED TANKS.
12. CONTRACTOR TO VERIFY EQUIPMENT MOUNTING ELEVATIONS AND DIMENSIONS PRIOR TO CONSTRUCTION.
13. CONTRACTOR IS TO VISIT THE SITE PRIOR TO CONSTRUCTION IN ORDER TO IDENTIFY ANY EXISTING CONFLICTS TO BE ADDRESSED.

RE-DESIGN SET 06-17-13

CONSULTANT:

REVISIONS:

DATE	DESCRIPTION	BY
5/17/13	PROJECT REVISIONS	JRN
8/02/13	2 REVISED ELEVATIONS	D.A.P.

APPROVED BY:

JAMES W. FRAZELL REGISTERED No. 17208 STATE OF INDIANA PROFESSIONAL ENGINEER 8/8/13

THIS DRAWING AND THE IDEAS, DESIGNS AND CONCEPTS CONTAINED HEREIN ARE THE EXCLUSIVE INTELLECTUAL PROPERTY OF TRIAD ASSOCIATES, INC., AND ARE NOT TO BE USED OR REPRODUCED, IN WHOLE OR IN PART, WITHOUT THE WRITTEN CONSENT OF TRIAD ASSOCIATES, INC.

TRIAD ASSOCIATES INC.
5835 LAWTON LOOP EAST DRIVE
INDIANAPOLIS, INDIANA 46216
PHONE: 317-377-5230 FAX: 317-377-5241

DESIGNED FOR:

THE TOWN OF SWEETSER
GRANT COUNTY, INDIANA

SHEET TITLE:

PROPOSED ROTO-SCREEN PLAN AND SECTIONS

JOB NUMBER: 201115D	
SCALE: AS NOTED	CHECKED BY: M.P.H.
PLOT SCALE: 1=24	PLOT DATE: 08/02/13
DRAWN BY: D.A.P.	DATE: MAY, 2013
DESIGNED BY: James W. Frazell, P.E.	
DRAWING NAME: 201115D-RotoScreenREV2	

SHEET No.

P2

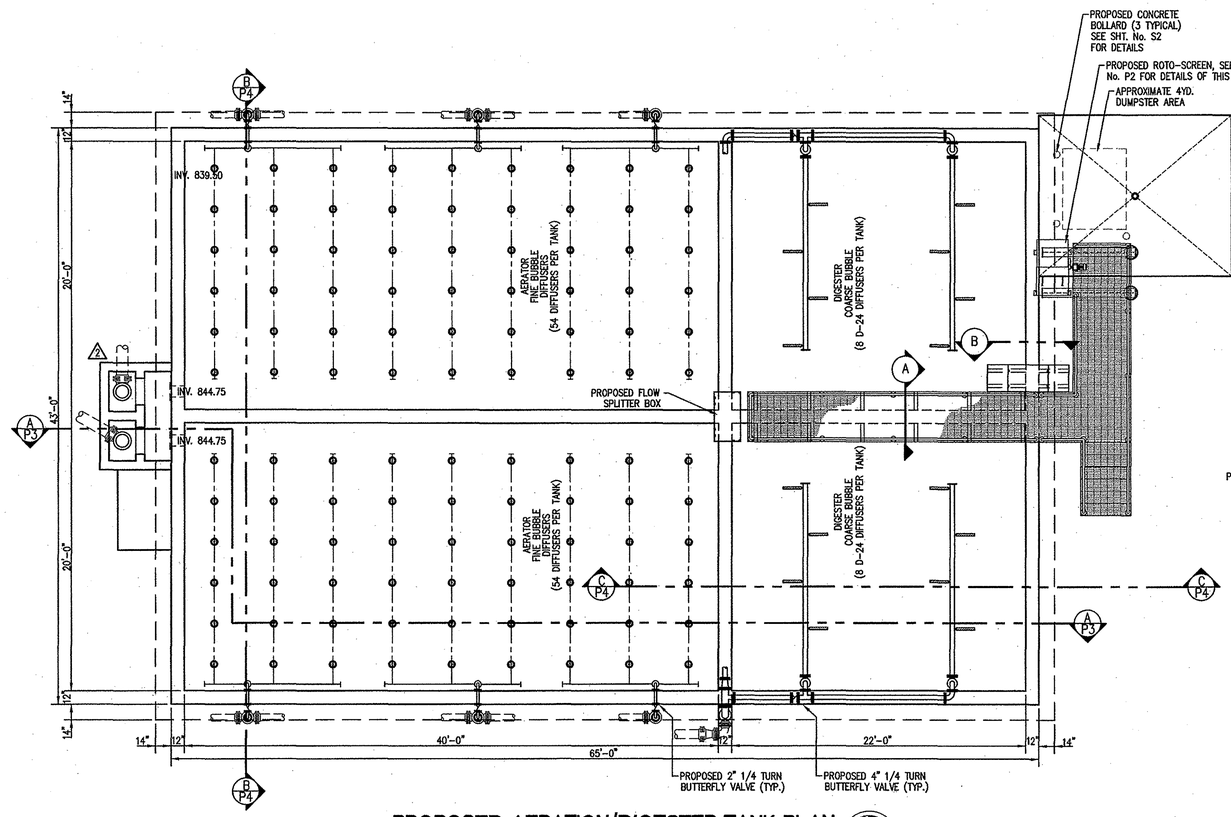

PROPOSED AERATION/DIGESTER TANK PLAN

SCALE: 3/16" = 1'-0"

NORTH

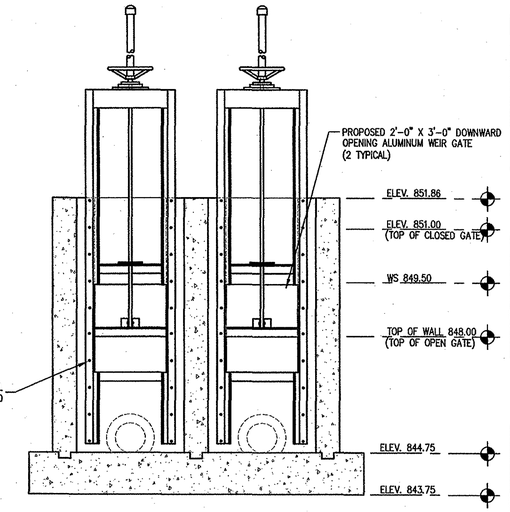

2 SECTION E-E

SCALE: 1/2" = 1'-0"

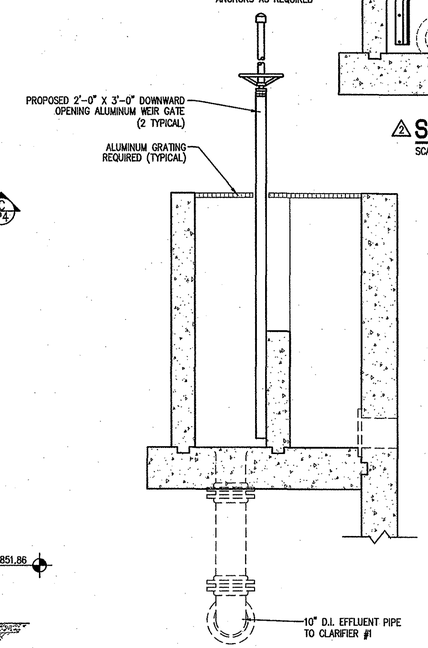

2 SECTION D-D

SCALE: 1/2" = 1'-0"

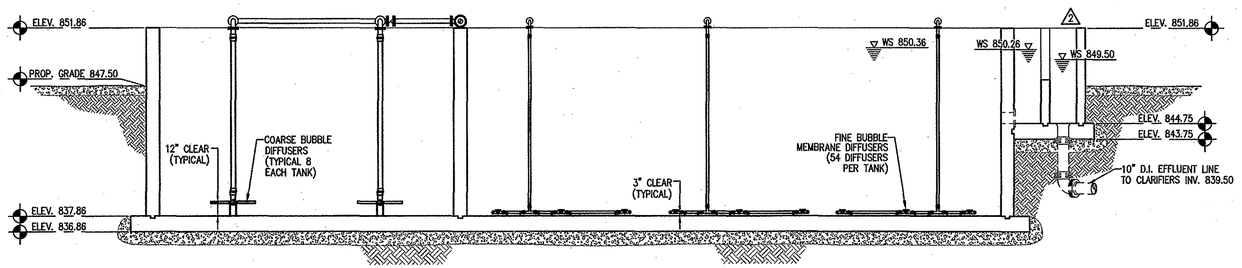

SECTION A-A

SCALE: 3/16" = 1'-0"

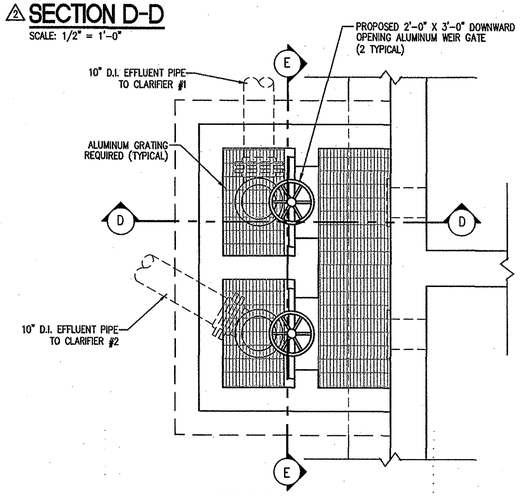

2 PROPOSED FLOW SPLITTER STRUCTURE

SCALE: 1/2" = 1'-0"

GENERAL NOTES:

1. CONTRACTOR TO INSTALL ALL EQUIPMENT IN COMPLETE ACCORDANCE WITH ALL MANUFACTURER'S RECOMMENDATIONS.
2. ALL FASTENERS, SUPPORTS, ETC. TO BE STAINLESS STEEL.
3. REFER TO SPECIFICATIONS FOR FURTHER INFORMATION.
4. ALL CONCRETE TO BE MINIMUM F'c = 4000 PSI. ALL REINFORCING STEEL TO BE MINIMUM Fy = 60,000 PSI.
5. SEE STRUCTURAL DETAIL SHEET AND ELECTRICAL/MECHANICAL SHEETS FOR FURTHER DETAIL.
6. SEE PLANT CONTROL/MONITOR SPECIFICATIONS FOR NECESSARY EQUIPMENT COORDINATION.
7. SEE DETAIL SHEET FOR TYPICAL WALL PENETRATION DETAILS.
8. ALL FERROUS METAL SURFACES TO BE PREPARED AND PAINTED IN ACCORDANCE WITH THE SPECIFICATIONS.
9. SEE DETAIL SHEET FOR GRATING DETAILS.
10. CONTRACTOR TO COORDINATE WITH ALL OTHER APPLICABLE PLAN SHEETS AND SPECIFICATIONS.
11. CONTRACTOR RESPONSIBLE FOR TRANSFERRING ALL SUITABLE TREATMENT MATERIAL FROM EXISTING TANKS TO THE PROPOSED TANKS.
12. CONTRACTOR TO VERIFY EQUIPMENT MOUNTING ELEVATIONS AND DIMENSIONS PRIOR TO CONSTRUCTION.
13. CONTRACTOR IS TO VISIT THE SITE PRIOR TO CONSTRUCTION IN ORDER TO IDENTIFY ANY EXISTING CONFLICTS TO BE ADDRESSED.

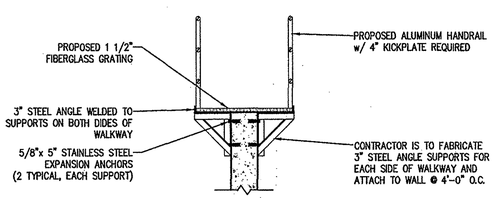

DETAIL "A"

NOT TO SCALE

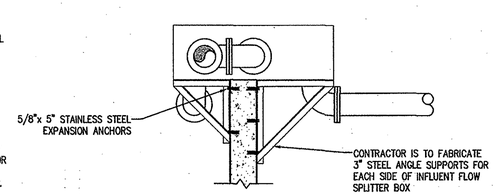

DETAIL "B"

NOT TO SCALE

RE-DESIGN SET 06-17-13

CONSULTANT:

REVISIONS:

DATE	DESCRIPTION	BY
5/17/13	PROJECT REVISIONS	JRN
8/02/13	2 ADDED FLOW SPLITTER STRUCTURE	D.A.P.

APPROVED BY:

JAMES W. FRAZELL REGISTERED No. 17208 STATE OF INDIANA PROFESSIONAL ENGINEER 8/2/13

THIS DRAWING AND THE IDEAS, DESIGNS AND CONCEPTS CONTAINED HEREIN ARE THE EXCLUSIVE INTELLECTUAL PROPERTY OF TRIAD ASSOCIATES, INC., AND ARE NOT TO BE USED OR REPRODUCED, IN WHOLE OR IN PART, WITHOUT THE WRITTEN CONSENT OF TRIAD ASSOCIATES, INC.

TRIAD ASSOCIATES INC.
5835 LAWTON LOOP EAST DRIVE
INDIANAPOLIS, INDIANA 46216
PHONE: 317-377-5230 FAX: 317-377-5241

DESIGNED FOR:

THE TOWN OF SWEETSER
GRANT COUNTY, INDIANA

SHEET TITLE:

PROPOSED TREATMENT TANK PLAN AND SECTIONS

JOB NUMBER: 201115D	
SCALE: AS NOTED	CHECKED BY: M.P.H.
PLOT SCALE: 1=64	PLOT DATE: 08/02/13
DRAWN BY: D.A.P.	DATE: MAY, 2013
DESIGNED BY: James W. Frazell, P.E.	
DRAWING NAME: 201115D-TankREV2	

SHEET No.

P3

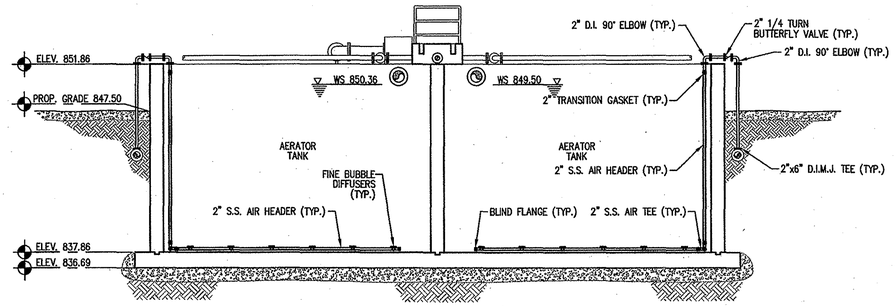

⚠2 SECTION B-B

SCALE: 3/16" = 1'-0"

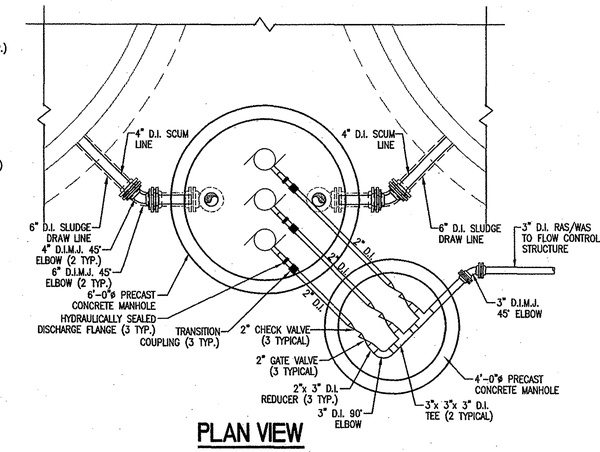

PLAN VIEW

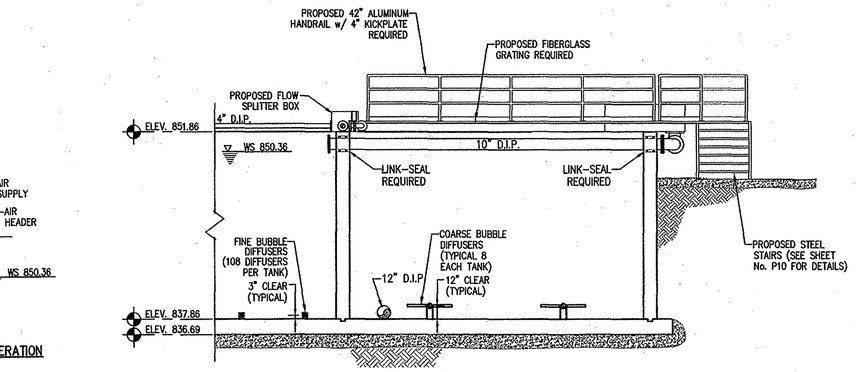

⚠2 SECTION C-C

SCALE: 3/16" = 1'-0"

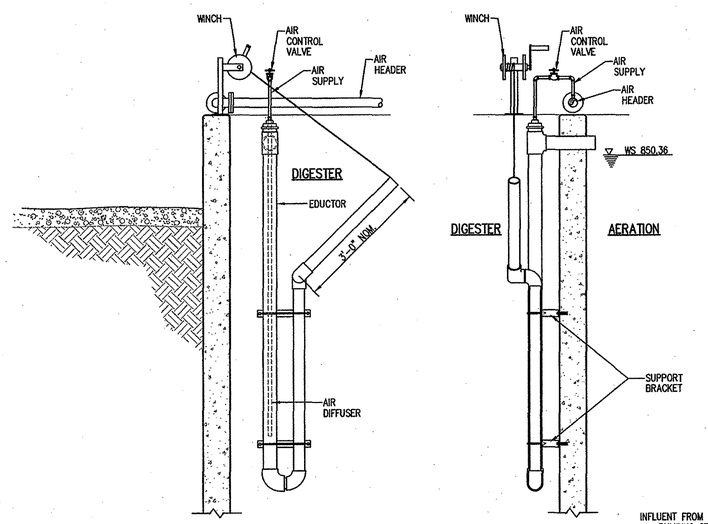

SWING ARM DIAMETER	EDUCTOR DIAMETER	AIR SUPPLY DIAMETER
3"	4"	3/4"
4"	5"	3/4"
5"	6"	1"

⚠2 SWING PIPE TYPE DECANT AIR LIFT DETAIL

SCALE: 3/8" = 1'-0"

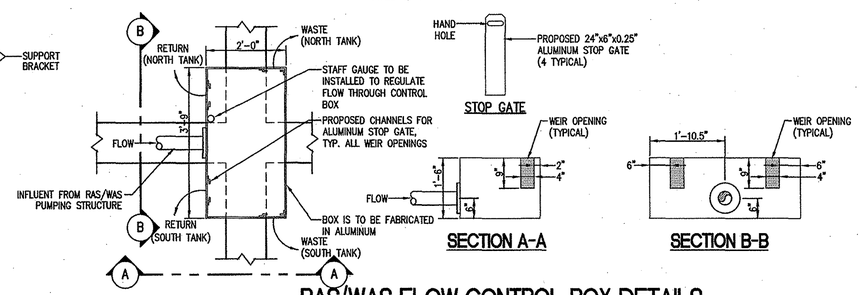

RAS/WAS FLOW CONTROL BOX DETAILS

SCALE: 3/4" = 1'-0"

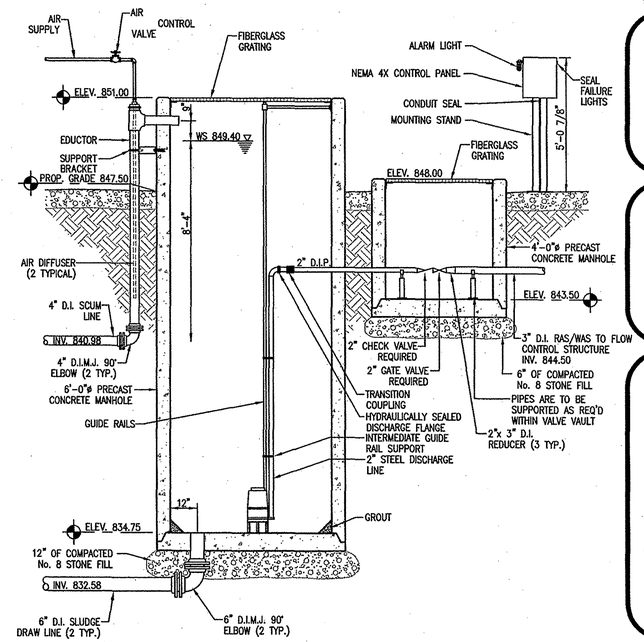

RAS/WAS PUMP STRUCTURE DETAIL

SCALE: 3/8" = 1'-0"

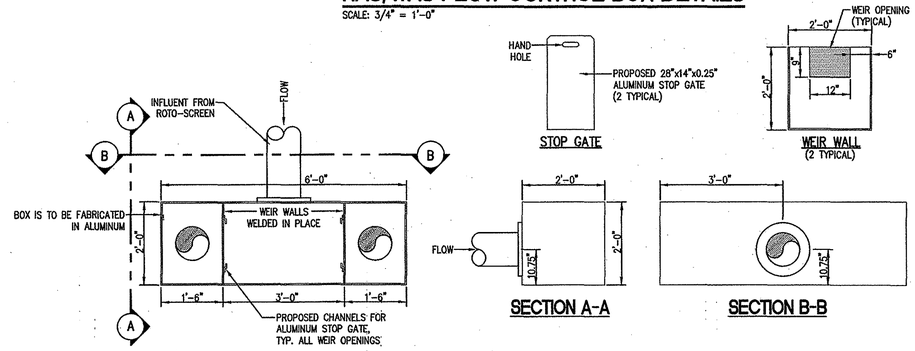

INFLUENT FLOW SPLITER BOX DETAILS

SCALE: 3/4" = 1'-0"

GENERAL NOTES:

1. CONTRACTOR TO INSTALL ALL EQUIPMENT IN COMPLETE ACCORDANCE WITH ALL MANUFACTURER'S RECOMMENDATIONS.
2. ALL FASTENERS, SUPPORTS, ETC. TO BE STAINLESS STEEL.
3. REFER TO SPECIFICATIONS FOR FURTHER INFORMATION.
4. ALL CONCRETE TO BE MINIMUM F'c = 4000 PSI. ALL REINFORCING STEEL TO BE MINIMUM Fy = 60,000 PSI.
5. SEE STRUCTURAL DETAIL SHEET AND ELECTRICAL/MECHANICAL SHEETS FOR FURTHER DETAIL.
6. SEE PLANT CONTROL/MONITOR SPECIFICATIONS FOR NECESSARY EQUIPMENT COORDINATION.
7. SEE DETAIL SHEET FOR TYPICAL WALL PENETRATION DETAILS.
8. ALL FERROUS METAL SURFACES TO BE PREPARED AND PAINTED IN ACCORDANCE WITH THE SPECIFICATIONS.
9. SEE DETAIL SHEET FOR GRATING DETAILS.
10. CONTRACTOR TO COORDINATE WITH ALL OTHER APPLICABLE PLAN SHEETS AND SPECIFICATIONS.
11. CONTRACTOR RESPONSIBLE FOR TRANSFERRING ALL SUITABLE TREATMENT MATERIAL FROM EXISTING TANKS TO THE PROPOSED TANKS.
12. CONTRACTOR TO VERIFY EQUIPMENT MOUNTING ELEVATIONS AND DIMENSIONS PRIOR TO CONSTRUCTION.
13. CONTRACTOR IS TO VISIT THE SITE PRIOR TO CONSTRUCTION IN ORDER TO IDENTIFY ANY EXISTING CONFLICTS TO BE ADDRESSED.

RE-DESIGN SET 06-17-13

CONSULTANT:

REVISIONS:

DATE	DESCRIPTION	BY
5/17/13	PROJECT REVISIONS	JRN
8/01/13	⚠2 REVISED ELEVATIONS	D.A.P.

APPROVED BY:

JAMES W. FRAZELL REGISTERED No. 17208 STATE OF INDIANA PROFESSIONAL ENGINEER 8/2/13

THIS DRAWING AND THE IDEAS, DESIGNS AND CONCEPTS CONTAINED HEREIN ARE THE EXCLUSIVE INTELLECTUAL PROPERTY OF TRIAD ASSOCIATES, INC., AND ARE NOT TO BE USED OR REPRODUCED, IN WHOLE OR IN PART, WITHOUT THE WRITTEN CONSENT OF TRIAD ASSOCIATES, INC.

TRIAD ASSOCIATES INC.
5835 LAWTON LOOP EAST DRIVE
INDIANAPOLIS, INDIANA 46216
PHONE: 317-377-5230 FAX: 317-377-5241

DESIGNED FOR:

THE TOWN OF SWEETSER
GRANT COUNTY, INDIANA

SHEET TITLE:

PROPOSED TREATMENT TANK SECTIONS AND DETAILS

JOB NUMBER: 201115D	
SCALE: AS NOTED	CHECKED BY: M.P.H.
PLOT SCALE: 1=64	PLOT DATE: 08/02/13
DRAWN BY: D.A.P.	DATE: MAY, 2013
DESIGNED BY: James W. Frazell, P.E.	
DRAWING NAME: 201115D-Tank2REV2	

SHEET No.

P4

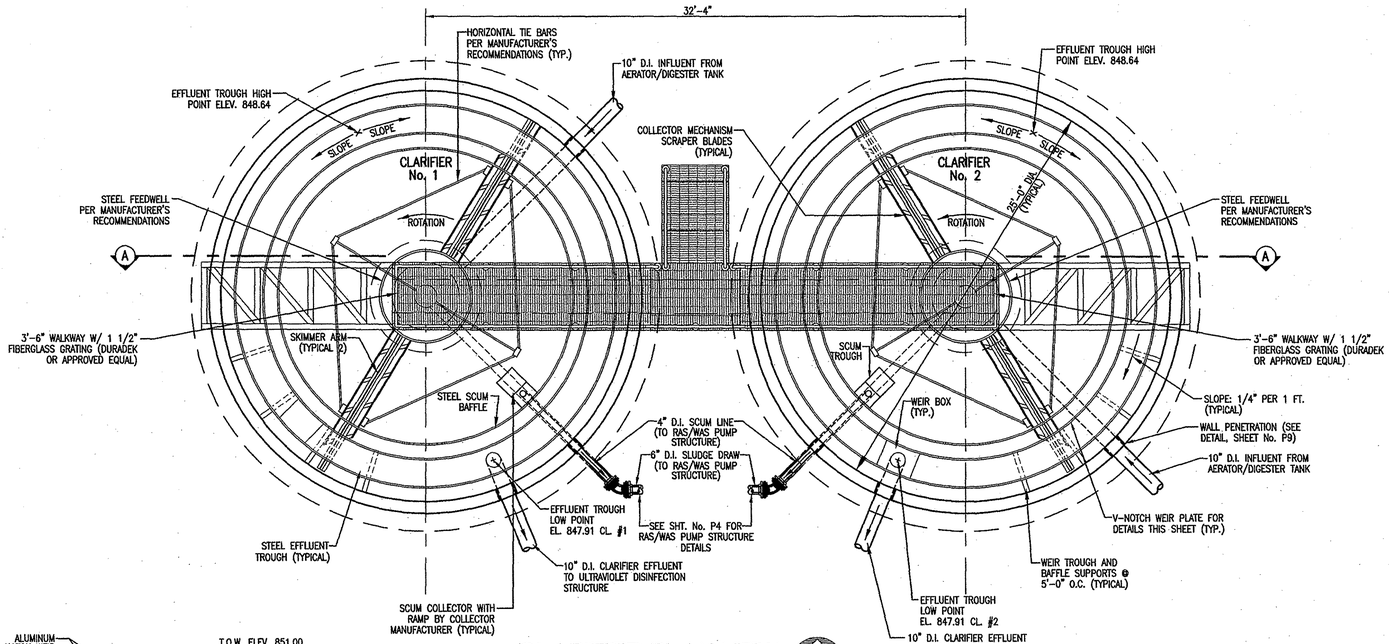

CLARIFIER PLAN VIEW

NOT TO SCALE

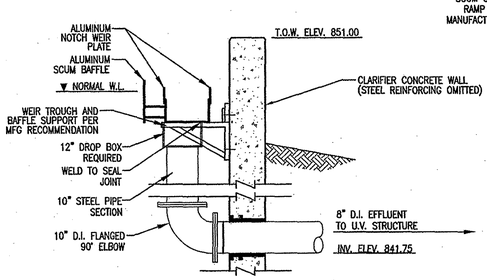

EFFLUENT DETAIL

NOT TO SCALE

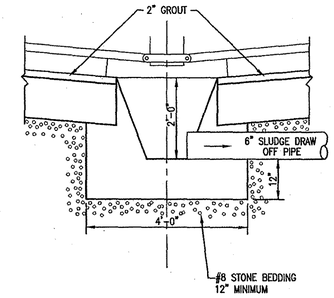

SECTION B-B

NOT TO SCALE

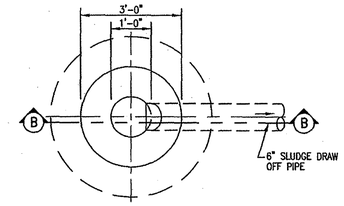

CENTER PIER DETAIL

NOT TO SCALE

NOTE: CONSULT MANUFACTURER'S DRAWING FOR FINAL DIMENSIONAL DATA

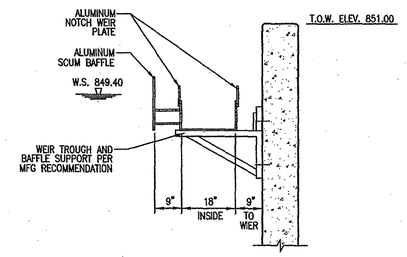

WEIR DETAIL

NOT TO SCALE

NOTES:

CONTRACTOR TO REMOVE 2' OF EXISTING EARTH BELOW SLAB. AREA BELOW SLAB TO BE FILLED WITH GRANULAR MATERIAL COMPACTED TO 98% IN 6" LIFTS.

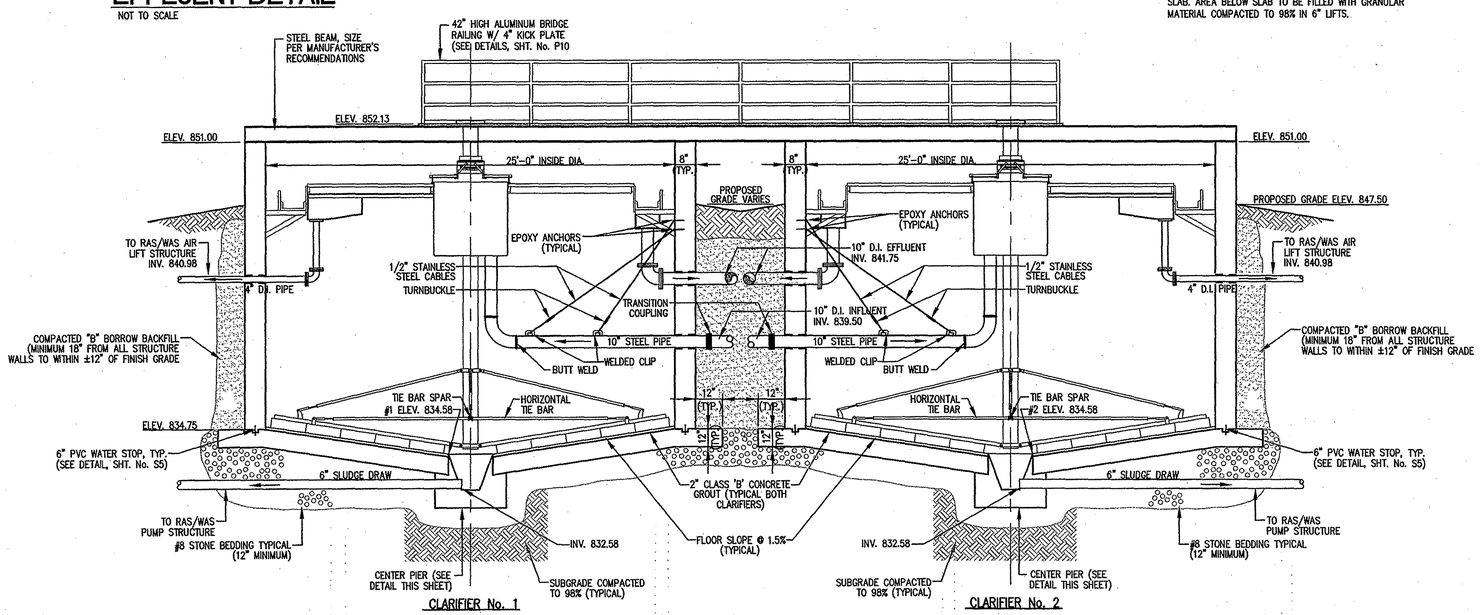

SECTION A-A

NOT TO SCALE

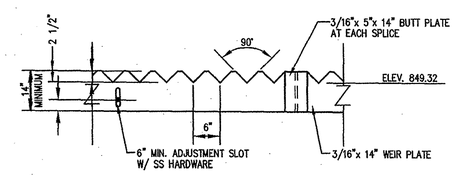

ADJUSTABLE WEIR DETAIL

NOT TO SCALE

GENERAL NOTES:

1. CONTRACTOR TO INSTALL ALL EQUIPMENT IN COMPLETE ACCORDANCE WITH ALL MANUFACTURER'S RECOMMENDATIONS.
2. ALL FASTENERS, SUPPORTS, ETC. TO BE STAINLESS STEEL.
3. REFER TO SPECIFICATIONS FOR FURTHER INFORMATION.
4. ALL CONCRETE TO BE MINIMUM F'c = 4000 PSI. ALL REINFORCING STEEL TO BE MINIMUM Fy = 60,000 PSI.
5. SEE STRUCTURAL DETAIL SHEET AND ELECTRICAL/MECHANICAL SHEETS FOR FURTHER DETAIL.
6. SEE PLANT CONTROL/MONITOR SPECIFICATIONS FOR NECESSARY EQUIPMENT COORDINATION.
7. SEE DETAIL SHEET FOR TYPICAL WALL PENETRATION DETAILS.
8. ALL FERROUS METAL SURFACES TO BE PREPARED AND PAINTED IN ACCORDANCE WITH THE SPECIFICATIONS.
9. SEE DETAIL SHEET FOR GRATING DETAILS.
10. CONTRACTOR TO COORDINATE WITH ALL OTHER APPLICABLE PLAN SHEETS AND SPECIFICATIONS.
11. CONTRACTOR RESPONSIBLE FOR TRANSFERRING ALL SUITABLE TREATMENT MATERIAL FROM EXISTING TANKS TO THE PROPOSED TANKS.
12. CONTRACTOR TO VERIFY EQUIPMENT MOUNTING ELEVATIONS AND DIMENSIONS PRIOR TO CONSTRUCTION.
13. CONTRACTOR IS TO VISIT THE SITE PRIOR TO CONSTRUCTION IN ORDER TO IDENTIFY ANY EXISTING CONFLICTS TO BE ADDRESSED.

RE-DESIGN SET 06-17-13

CONSULTANT:

REVISIONS:

DATE	DESCRIPTION	BY
5/17/13	PROJECT REVISIONS	JRN
8/02/13	REMOVED DRAIN HOLES FROM	D.A.P.
	10" INFLUENT LINE (2 TYPICAL)	

APPROVED BY:

JAMES W. FRAZELL REGISTERED No. 17208 STATE OF INDIANA PROFESSIONAL ENGINEER

8/2/13

THIS DRAWING AND THE IDEAS, DESIGNS AND CONCEPTS CONTAINED HEREIN ARE THE EXCLUSIVE INTELLECTUAL PROPERTY OF TRIAD ASSOCIATES, INC., AND ARE NOT TO BE USED OR REPRODUCED, IN WHOLE OR IN PART, WITHOUT THE WRITTEN CONSENT OF TRIAD ASSOCIATES, INC.

TRIAD ASSOCIATES INC.
5835 LAWTON LOOP EAST DRIVE
INDIANAPOLIS, INDIANA 46216
PHONE: 317-377-5230 FAX: 317-377-5241

DESIGNED FOR:

THE TOWN OF SWEETSER
GRANT COUNTY, INDIANA

SHEET TITLE:

PROPOSED CLARIFIER PLAN SECTION AND DETAILS

JOB NUMBER: 201115D	
SCALE: AS NOTED	CHECKED BY: M.P.H.
PLOT SCALE: 1=48	PLOT DATE: 08/02/13
DRAWN BY: D.A.P.	DATE: MAY, 2013
DESIGNED BY: James W. Frazell, P.E.	
DRAWING NAME: 201115D-ClarPlanREV2	

SHEET No.

P5

GENERAL NOTES:

1. CONTRACTOR TO INSTALL ALL EQUIPMENT IN COMPLETE ACCORDANCE WITH ALL MANUFACTURER'S RECOMMENDATIONS.
2. ALL FASTENERS, SUPPORTS, ETC. TO BE STAINLESS STEEL.
3. REFER TO SPECIFICATIONS FOR FURTHER INFORMATION.
4. ALL CONCRETE TO BE MINIMUM F'c = 4000 PSI. ALL REINFORCING STEEL TO BE MINIMUM Fy = 60,000 PSI.
5. SEE STRUCTURAL DETAIL SHEET AND ELECTRICAL/MECHANICAL SHEETS FOR FURTHER DETAIL.
6. SEE PLANT CONTROL/MONITOR SPECIFICATIONS FOR NECESSARY EQUIPMENT COORDINATION.
7. SEE DETAIL SHEET FOR TYPICAL WALL PENETRATION DETAILS.
8. ALL FERROUS METAL SURFACES TO BE PREPARED AND PAINTED IN ACCORDANCE WITH THE SPECIFICATIONS.
9. SEE DETAIL SHEET FOR GRATING DETAILS.
10. CONTRACTOR TO COORDINATE WITH ALL OTHER APPLICABLE PLAN SHEETS AND SPECIFICATIONS.
11. CONTRACTOR RESPONSIBLE FOR TRANSFERRING ALL SUITABLE TREATMENT MATERIAL FROM EXISTING TANKS TO THE PROPOSED TANKS.
12. CONTRACTOR TO VERIFY EQUIPMENT MOUNTING ELEVATIONS AND DIMENSIONS PRIOR TO CONSTRUCTION.
13. CONTRACTOR IS TO VISIT THE SITE PRIOR TO CONSTRUCTION IN ORDER TO IDENTIFY ANY EXISTING CONFLICTS TO BE ADDRESSED.

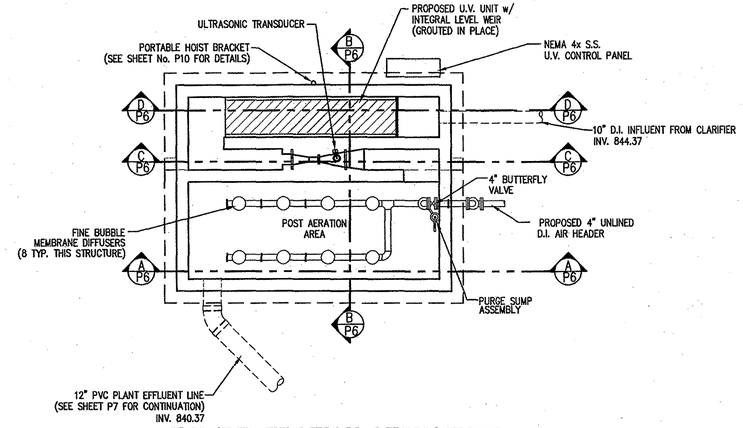

U.V./REAERATION STRUCTURE PLAN VIEW

SCALE: 1/4"= 1'-0"

GENERAL NOTES:

1. CONTRACTOR TO INSTALL ALL EQUIPMENT IN COMPLETE ACCORDANCE WITH ALL MANUFACTURER'S RECOMMENDATIONS.
2. ALL FASTENERS, SUPPORTS, ETC. TO BE STAINLESS STEEL.
3. REFER TO SPECIFICATIONS FOR FURTHER INFORMATION.
4. ALL CONCRETE TO BE MINIMUM F'c = 4000 PSI. ALL REINFORCING STEEL TO BE MINIMUM Fy = 60,000 PSI.
5. SEE STRUCTURAL DETAIL SHEET S5 AND ELECTRICAL/MECHANICAL SHEETS FOR FURTHER DETAIL.
6. SEE DETAIL SHEET P9 FOR TYPICAL WALL PENETRATION DETAILS.
7. ALL FERROUS METAL SURFACES TO BE PREPARED AND PAINTED IN ACCORDANCE WITH THE SPECIFICATIONS.
8. SEE DETAIL SHEET P10 FOR GRATING DETAILS.
9. CONTRACTOR TO COORDINATE WITH ALL OTHER APPLICABLE PLAN SHEETS AND SPECIFICATIONS.
10. CONTRACTOR RESPONSIBLE FOR TRANSFERRING ALL SUITABLE TREATMENT MATERIAL FROM EXISTING TANKS TO THE PROPOSED TANKS.
11. CONTRACTOR TO VERIFY EQUIPMENT MOUNTING ELEVATIONS AND DIMENSIONS PRIOR TO CONSTRUCTION.
12. CONTRACTOR SHALL CHAMFER ALL UPPER EDGES OF TANK FOR DETAIL SEE SHEET S5.

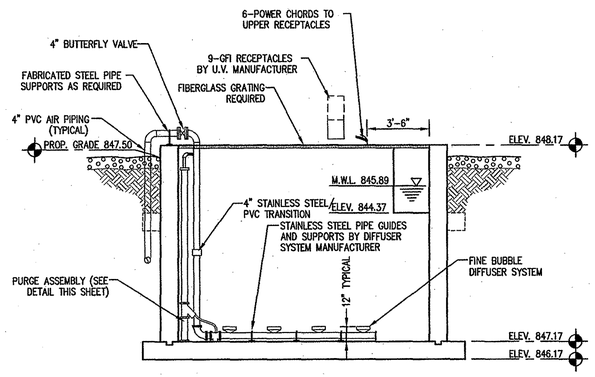

SECTION A-A

SCALE: 1/4"= 1'-0"

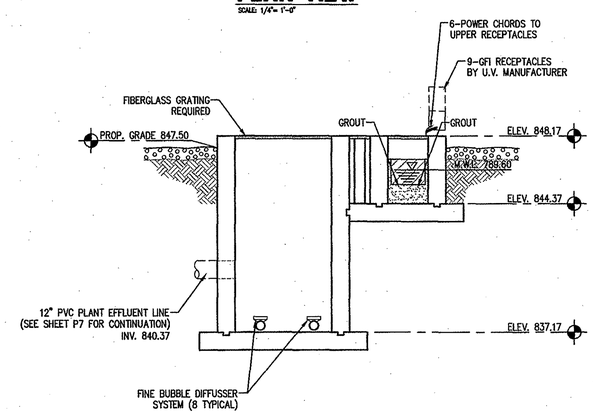

SECTION B-B

SCALE: 1/4"= 1'-0"

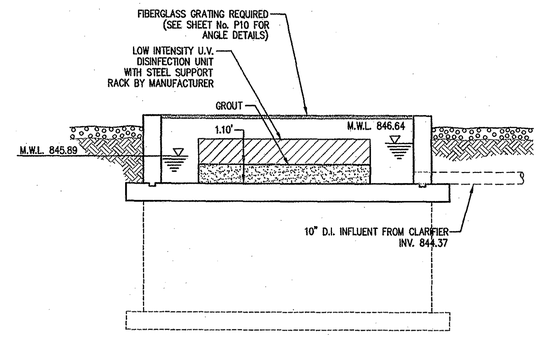

SECTION D-D

SCALE: 1/4"= 1'-0"

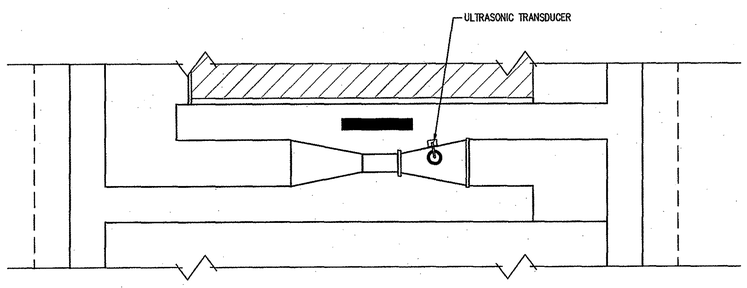

PLAN VIEW

SCALE: 1/2"= 1'-0"

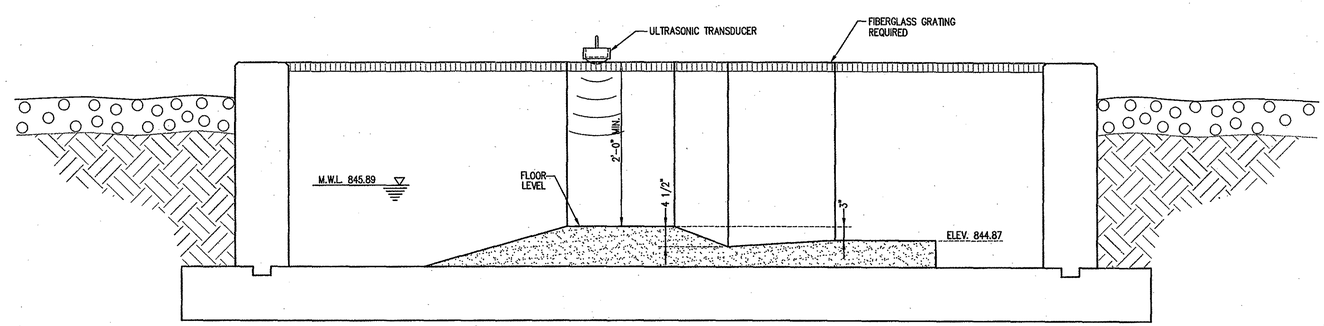

SECTION C-C

SCALE: 3/4"= 1'-0"

PARSHALL FLUME DETAILS

RE-DESIGN SET 06-17-13

CONSULTANT:

REVISIONS:

DATE	DESCRIPTION	BY
5/17/13	PROJECT REVISIONS	JRN

APPROVED BY:

JAMES W. FRAZELL REGISTERED No. 17208 STATE OF INDIANA PROFESSIONAL ENGINEER 6/17/13

THIS DRAWING AND THE IDEAS, DESIGNS AND CONCEPTS CONTAINED HEREIN ARE THE EXCLUSIVE INTELLECTUAL PROPERTY OF TRIAD ASSOCIATES, INC., AND ARE NOT TO BE USED OR REPRODUCED, IN WHOLE OR IN PART, WITHOUT THE WRITTEN CONSENT OF TRIAD ASSOCIATES, INC.

TRIAD ASSOCIATES INC.
5835 LAWTON LOOP EAST DRIVE
INDIANAPOLIS, INDIANA 46216
PHONE: 317-377-5230 FAX: 317-377-5241

DESIGNED FOR:

THE TOWN OF SWEETSER
GRANT COUNTY, INDIANA

SHEET TITLE:

PROPOSED POST-AERATION, ULTRA VIOLET DISINFECTION AND METERING STRUCTURE PLAN AND SECTIONS

JOB NUMBER: 201115D	
SCALE: AS NOTED	CHECKED BY: M.P.H.
PLOT SCALE: 1=48	PLOT DATE: 06/17/13
DRAWN BY: D.A.P.	DATE: MAY, 2013
DESIGNED BY: James W. Frazell, P.E.	
DRAWING NAME: 201115D-UVPlanREV2	

SHEET No.

P6

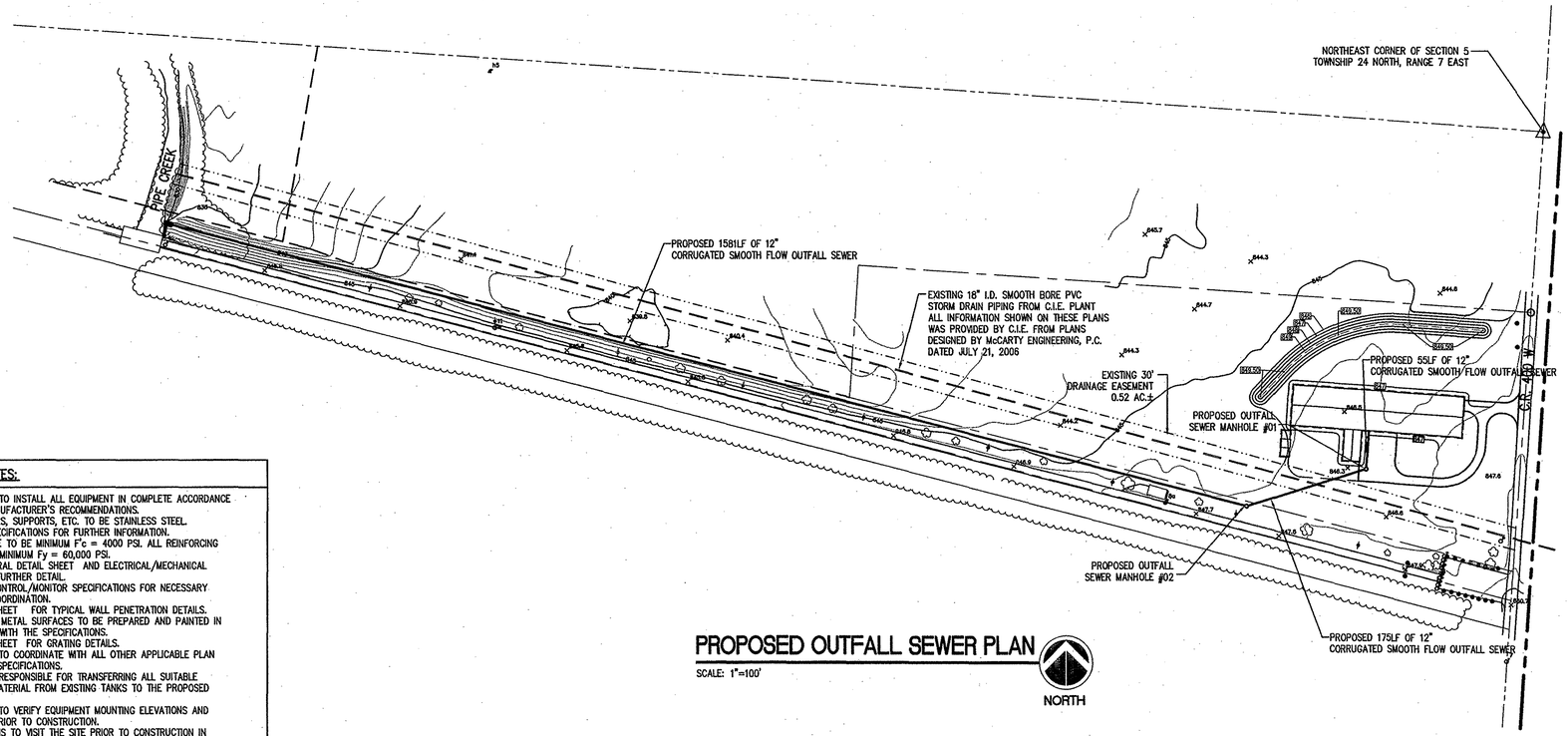

PROPOSED OUTFALL SEWER PLAN

SCALE: 1"=100'

NORTH

GENERAL NOTES:

1. CONTRACTOR TO INSTALL ALL EQUIPMENT IN COMPLETE ACCORDANCE WITH ALL MANUFACTURER'S RECOMMENDATIONS.
2. ALL FASTENERS, SUPPORTS, ETC. TO BE STAINLESS STEEL.
3. REFER TO SPECIFICATIONS FOR FURTHER INFORMATION.
4. ALL CONCRETE TO BE MINIMUM F'c = 4000 PSI. ALL REINFORCING STEEL TO BE MINIMUM Fy = 60,000 PSI.
5. SEE STRUCTURAL DETAIL SHEET AND ELECTRICAL/MECHANICAL SHEETS FOR FURTHER DETAIL.
6. SEE PLANT CONTROL/MONITOR SPECIFICATIONS FOR NECESSARY EQUIPMENT COORDINATION.
7. SEE DETAIL SHEET FOR TYPICAL WALL PENETRATION DETAILS.
8. ALL FERROUS METAL SURFACES TO BE PREPARED AND PAINTED IN ACCORDANCE WITH THE SPECIFICATIONS.
9. SEE DETAIL SHEET FOR GRATING DETAILS.
10. CONTRACTOR TO COORDINATE WITH ALL OTHER APPLICABLE PLAN SHEETS AND SPECIFICATIONS.
11. CONTRACTOR RESPONSIBLE FOR TRANSFERRING ALL SUITABLE TREATMENT MATERIAL FROM EXISTING TANKS TO THE PROPOSED TANKS.
12. CONTRACTOR TO VERIFY EQUIPMENT MOUNTING ELEVATIONS AND DIMENSIONS PRIOR TO CONSTRUCTION.
13. CONTRACTOR IS TO VISIT THE SITE PRIOR TO CONSTRUCTION IN ORDER TO IDENTIFY ANY EXISTING CONFLICTS TO BE ADDRESSED.

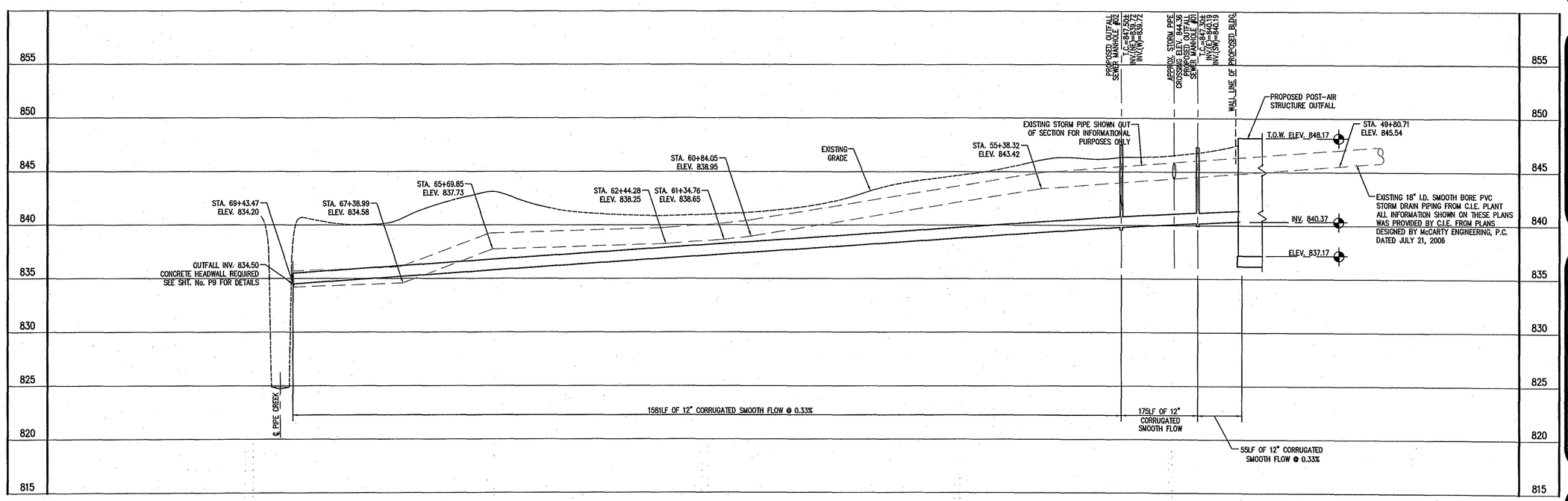

RE-DESIGN SET 06-17-13

CONSULTANT:

REVISIONS:

DATE	DESCRIPTION	BY
5/17/13	PROJECT REVISIONS	JRN

APPROVED BY:

JAMES W. FRAZELL REGISTERED No. 17208 STATE OF INDIANA PROFESSIONAL ENGINEER 6/17/13

THIS DRAWING AND THE IDEAS, DESIGNS AND CONCEPTS CONTAINED HEREIN ARE THE EXCLUSIVE INTELLECTUAL PROPERTY OF TRIAD ASSOCIATES, INC., AND ARE NOT TO BE USED OR REPRODUCED, IN WHOLE OR IN PART, WITHOUT THE WRITTEN CONSENT OF TRIAD ASSOCIATES, INC.

TRIAD ASSOCIATES INC.
5835 LAWTON LOOP EAST DRIVE
INDIANAPOLIS, INDIANA 46216
PHONE: 317-377-5230 FAX: 317-377-5241

DESIGNED FOR:

THE TOWN OF SWEETSER
GRANT COUNTY, INDIANA

SHEET TITLE:

PROPOSED OUTFALL SEWER PLAN AND PROFILE

JOB NUMBER: 201115D	
SCALE: AS NOTED	CHECKED BY: M.P.H.
PLOT SCALE: 1=100	PLOT DATE: 06/17/13
DRAWN BY: D.A.P.	DATE: MAY, 2013
DESIGNED BY: James W. Frazell, P.E.	
DRAWING NAME: 201115D-PropOverallSiteREV2	

SHEET No.

P7

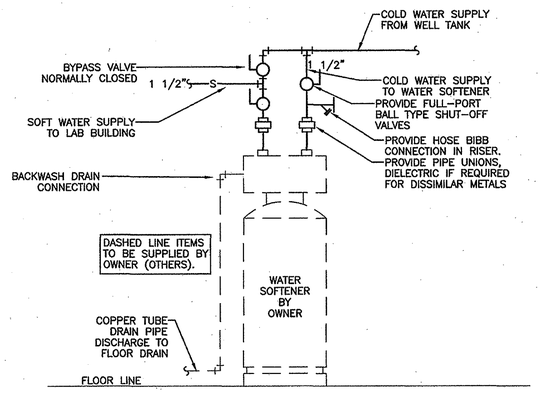

PIPING ARRANGEMENT SHOWN IS SCHEMATIC. ADJUST TO SUIT FIELD CONDITIONS. REFER TO FLOOR PLANS FOR PIPE SIZES. PROVIDE SEISMIC STRAP IF REQUIRED BY LOCAL AUTHORITIES.

WATER SOFTENER CONNECTIONS

NOT TO SCALE

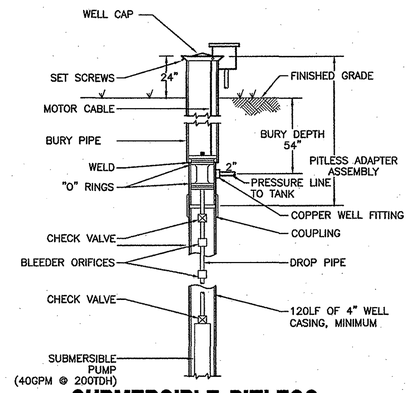

SUBMERSIBLE PITLESS WELL ADAPTER

NOT TO SCALE

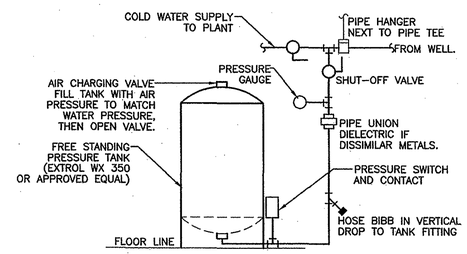

UNIT SHALL BE FDA APPROVED FOR DOMESTIC WATER USE.
PIPING ARRANGEMENT SHOWN IS SCHEMATIC. ADJUST TO SUIT FIELD CONDITIONS.
FOLLOW MANUFACTURER'S INSTRUCTIONS FOR INSTALLATION PROCEDURE. VERIFY PROPER OPERATION WHEN INSTALLED.

WELL PRESSURE TANK PIPING

NOT TO SCALE

GENERAL NOTES:

1. CONTRACTOR TO INSTALL ALL EQUIPMENT IN COMPLETE ACCORDANCE WITH ALL MANUFACTURER'S RECOMMENDATIONS.
2. ALL FASTENERS, SUPPORTS, ETC. TO BE STAINLESS STEEL.
3. REFER TO SPECIFICATIONS FOR FURTHER INFORMATION.
4. ALL CONCRETE TO BE MINIMUM F'c = 4000 PSI. ALL REINFORCING STEEL TO BE MINIMUM Fy = 60,000 PSI.
5. SEE STRUCTURAL DETAIL SHEET AND ELECTRICAL/MECHANICAL SHEETS FOR FURTHER DETAIL.
6. SEE PLANT CONTROL/MONITOR SPECIFICATIONS FOR NECESSARY EQUIPMENT COORDINATION.
7. SEE DETAIL SHEET FOR TYPICAL WALL PENETRATION DETAILS.
8. ALL FERROUS METAL SURFACES TO BE PREPARED AND PAINTED IN ACCORDANCE WITH THE SPECIFICATIONS.
9. SEE DETAIL SHEET FOR GRATING DETAILS.
10. CONTRACTOR TO COORDINATE WITH ALL OTHER APPLICABLE PLAN SHEETS AND SPECIFICATIONS.
11. CONTRACTOR RESPONSIBLE FOR TRANSFERRING ALL SUITABLE TREATMENT MATERIAL FROM EXISTING TANKS TO THE PROPOSED TANKS.
12. CONTRACTOR TO VERIFY EQUIPMENT MOUNTING ELEVATIONS AND DIMENSIONS PRIOR TO CONSTRUCTION.
13. CONTRACTOR IS TO VISIT THE SITE PRIOR TO CONSTRUCTION IN ORDER TO IDENTIFY ANY EXISTING CONFLICTS TO BE ADDRESSED.

RE-DESIGN SET 06-17-13

CONSULTANT:

REVISIONS:

DATE	DESCRIPTION	BY
5/17/13	PROJECT REVISIONS	JRN

APPROVED BY:

JAMES W. FRAZELL REGISTERED No. 17208 STATE OF INDIANA PROFESSIONAL ENGINEER

6/17/13

THIS DRAWING AND THE IDEAS, DESIGNS AND CONCEPTS CONTAINED HEREIN ARE THE EXCLUSIVE INTELLECTUAL PROPERTY OF TRIAD ASSOCIATES, INC., AND ARE NOT TO BE USED OR REPRODUCED, IN WHOLE OR IN PART, WITHOUT THE WRITTEN CONSENT OF TRIAD ASSOCIATES, INC.

TRIAD ASSOCIATES INC.
5835 LAWTON LOOP EAST DRIVE
INDIANAPOLIS, INDIANA 46216
PHONE: 317-377-5230 FAX: 317-377-5241

DESIGNED FOR:

THE TOWN OF SWEETSER
GRANT COUNTY, INDIANA

SHEET TITLE:

PROPOSED WELL DETAILS

JOB NUMBER: 201115D	
SCALE: AS NOTED	CHECKED BY: M.P.H.
PLOT SCALE: 1=24	PLOT DATE: 06/17/13
DRAWN BY: D.A.P.	DATE: MAY, 2013
DESIGNED BY: James W. Frazell, P.E.	
DRAWING NAME: 201115D-WellDetREV2	

SHEET No.

P8

TABLE A							
LOCATION DESCRIPTION	DIMENSIONS					INFLUENT PIPE	NOTES
	L1	L2	W1	W2	H	DESCRIPTION	
PLANT EFFLUENT STRUCTURE	6'-0"	5'-4"	6'-0"	4'-6"	4'-6"	30" D.I. FROM POST AERATION STRUCTURE INV. = 480.80	NONE

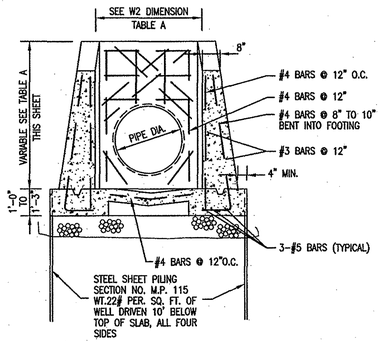

SECTION B-B
NOT TO SCALE

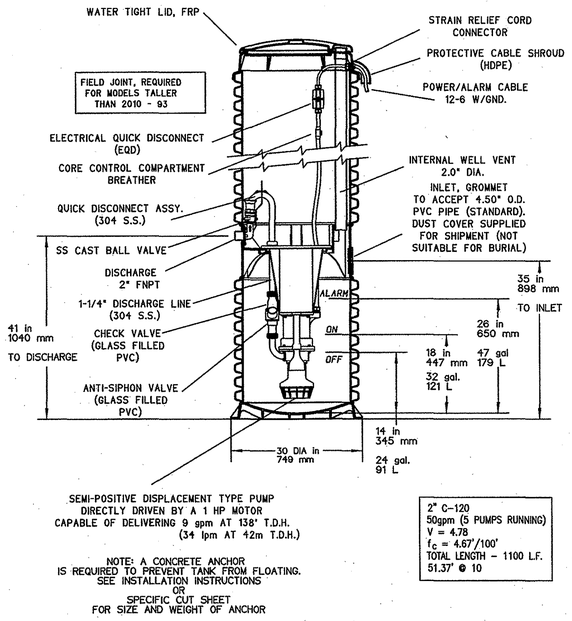

GRINDER STATION DETAIL
SCALE: NTS

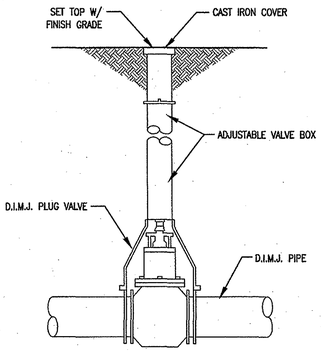

YARD VALVE AND BOX DETAIL
NOT TO SCALE

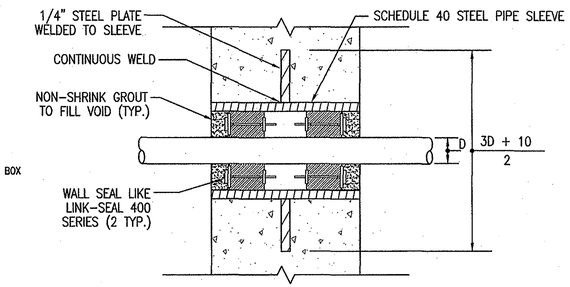

PIPE I.D.	SLEEVE I.D.
3" (7.62 cm.)	4.06" (10.31 cm.)
4" (10.16 cm.)	4.80" (12.45 cm.)
6" (15.24 cm.)	7.00" (17.78 cm.)
8" (20.32 cm.)	9.15" (23.24 cm.)
10" (25.40 cm.)	11.20" (28.45 cm.)
12" (30.48 cm.)	13.30" (33.78 cm.)
14" (35.56 cm.)	15.44" (39.22 cm.)
16" (40.64 cm.)	17.54" (44.55 cm.)

PIPE THRU WALL DETAIL
NOT TO SCALE

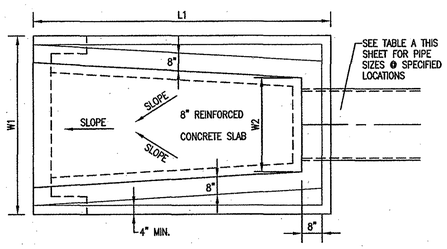

PLAN VIEW
NOT TO SCALE

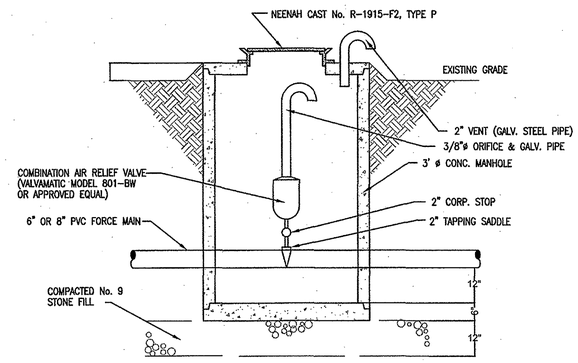

AIR/VAC RELIEF STRUCTURE
NOT TO SCALE

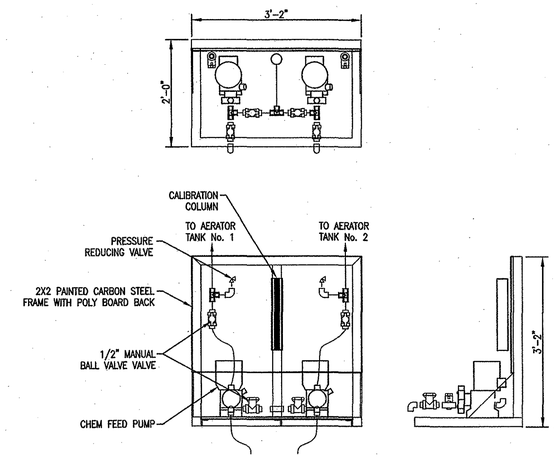

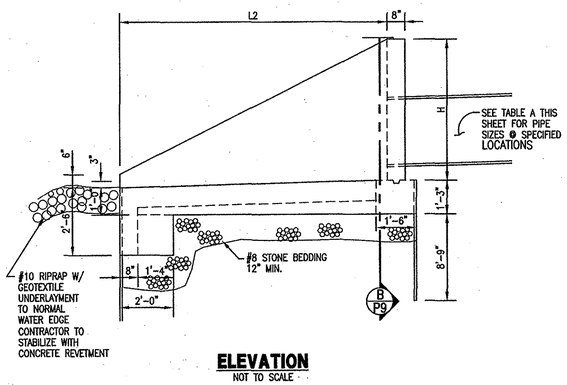

ELEVATION
NOT TO SCALE

PLANT DISCHARGE STRUCTURES
NOT TO SCALE

PIPE SIZE	BELOW 8"	8" TO 15"	18" & OVER
BEDDING BELOW THE PIPE BARREL - "X"	O.D./8 4" MIN.	O.D./8 4" MIN.	O.D./8 4" MAX.

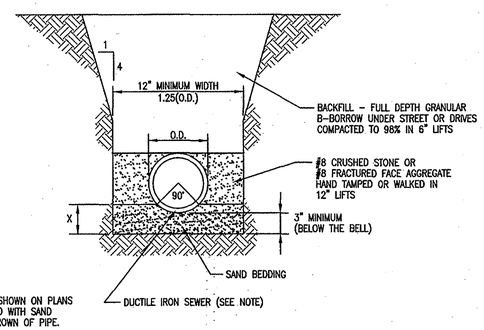

NOTE:
ANY PVC PIPING SHOWN ON PLANS TO BE BACKFILLED WITH SAND TO 12" ABOVE CROWN OF PIPE.

TYPICAL FORCEMAIN TRENCH BEDDING DETAIL
NOT TO SCALE

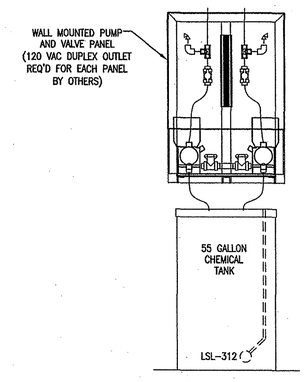

NOTES:
1. ALL CHEMICAL FEED PIPING TO BE 1/8" POLY-FLO CHEMICAL LINE HOUSED IN 3/4" SCH. 80 PVC LINE ATTACHED TO PROPOSED TANK WALL.
2. ALUM FEED REQUIREMENT WILL BE 6.54 GPD.

PROPOSED ALUM FEED TANK AND PUMP DETAIL
NOT TO SCALE

RE-DESIGN SET 06-17-13

CONSULTANT:

REVISIONS:

DATE	DESCRIPTION	BY
5/17/13	PROJECT REVISIONS	JRN

APPROVED BY:

JAMES W. FRAZELL REGISTERED No. 17208 STATE OF INDIANA PROFESSIONAL ENGINEER 6/17/13

THIS DRAWING AND THE IDEAS, DESIGNS AND CONCEPTS CONTAINED HEREIN ARE THE EXCLUSIVE INTELLECTUAL PROPERTY OF TRIAD ASSOCIATES, INC., AND ARE NOT TO BE USED OR REPRODUCED, IN WHOLE OR IN PART, WITHOUT THE WRITTEN CONSENT OF TRIAD ASSOCIATES, INC.

TRIAD ASSOCIATES INC.
5835 LAWTON LOOP EAST DRIVE
INDIANAPOLIS, INDIANA 46216
PHONE: 317-377-5230 FAX: 317-377-5241

DESIGNED FOR:

THE TOWN OF SWEETSER
GRANT COUNTY, INDIANA

SHEET TITLE:

MISCELLANEOUS SITE DETAILS

JOB NUMBER: 201115D	
SCALE: AS NOTED	CHECKED BY: M.P.H.
PLOT SCALE: 1=32	PLOT DATE: 06/17/13
DRAWN BY: D.A.P.	DATE: MAY, 2013
DESIGNED BY: James W. Frazell, P.E.	
DRAWING NAME: 201115D-Det01REV2	

SHEET No.

P9

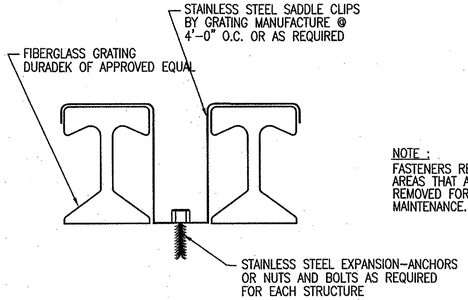

NOTE :
FASTENERS REQUIRED AT ALL AREAS THAT ARE NOT REMOVED FOR PERIODIC MAINTENANCE.

FIBERGLASS OR ALUMINUM GRATING HOLD-DOWN DETAIL

NOT TO SCALE

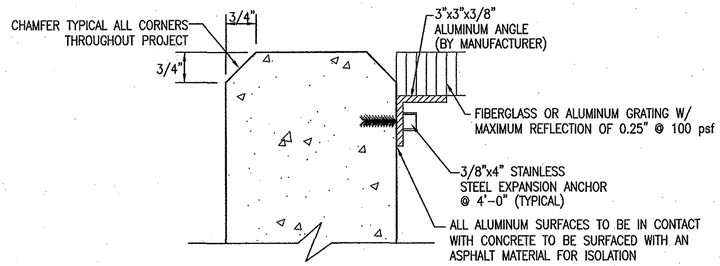

GRATING ANGLE DETAIL

NOT TO SCALE

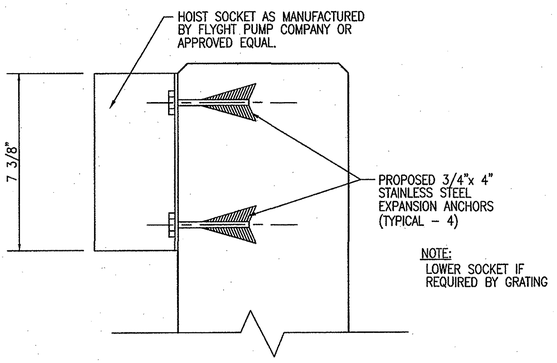

NOTE:
LOWER SOCKET IF REQUIRED BY GRATING

PORTABLE HOIST WALL SOCKET DETAIL

NOT TO SCALE

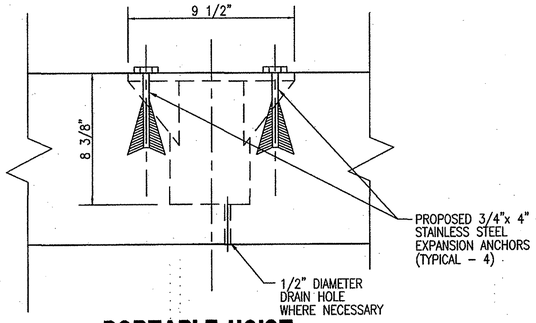

PORTABLE HOIST SLAB SOCKET DETAIL

NOT TO SCALE

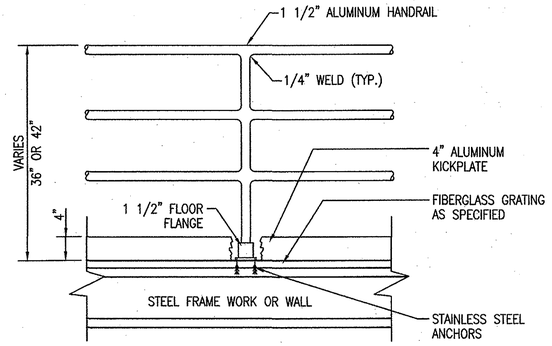

TYPICAL HANDRAIL ELEVATION

NOT TO SCALE

NOTE:

1. ALL STAIRWAYS W/ RISE GREATER THAN 4'-0" TO BE SUPPLIED WITH 34" HIGH (TOP OF NOSING TO TOP OF RAIL) ALUMINUM HANDRAIL BOTH SIDES (SEE TYPICAL HANDRAIL DETAIL - THIS SHEET)
2. ALL STAIRWAYS EXCEEDING 6' IN HORIZONTAL LENGTH TO BE INSTALLED WITH 4"ø STEEL SUPPORTS UNDER BOTH STRINGERS TO GRADE @ 8'-0" O.C. OR AT CENTER OF STAIRWAY WHICH VARIES LESS. (SEE SUPPORT BASE FOUNDATION DETAIL THIS SHEET)
3. ALL STEEL TO BE PAINTED IN ACCORDANCE WITH SPECIFICATIONS

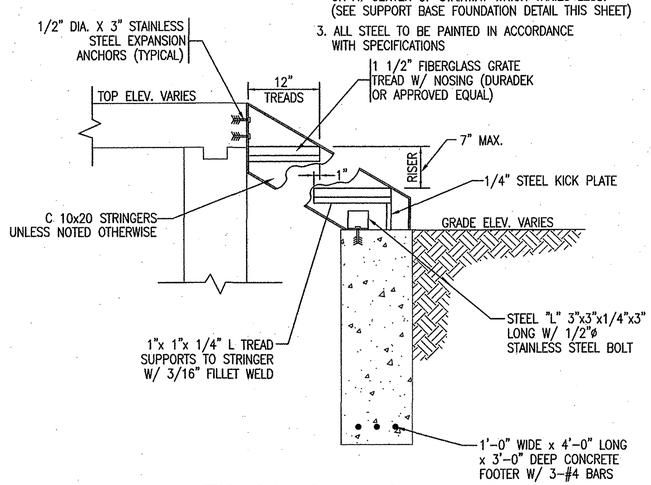

TYPICAL STEEL STAIR DETAIL

NOT TO SCALE

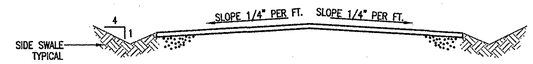

TYPICAL DRIVE CROSS SECTION

NOT TO SCALE

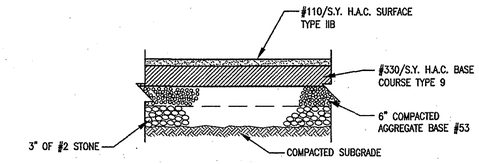

TYPICAL ASPHALT DRIVE DETAIL

NOT TO SCALE

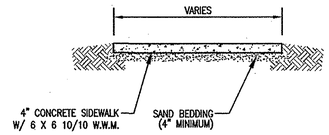

TYPICAL SIDEWALK DETAIL

NOT TO SCALE

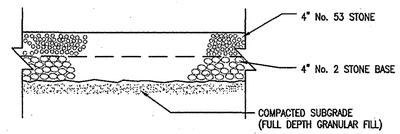

TYPICAL STONE DRIVE DETAIL

NOT TO SCALE

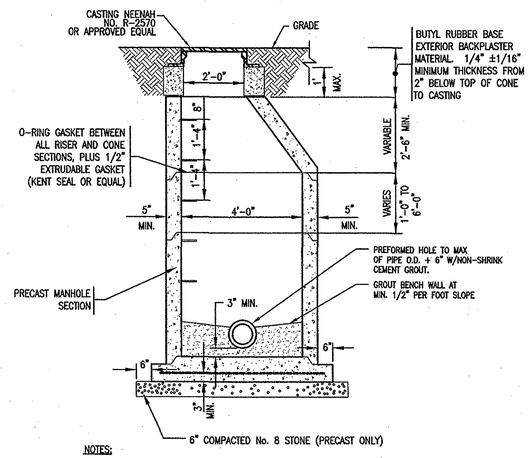

NOTES:

1. MANHOLE STEPS SHALL BE POLYPROPYLENE, POLYPROPYLENE COATED STEEL REINFORCING OR APPROVED NON-CORROSIVE FIBERGLASS MATERIAL. COPOLYMER POLYPROPYLENE SHALL MEET ASTM D-4101 REINFORCED WITH DEFORMED 3/8" STEEL MEETING ASTM A-615, GRADE 60.
2. MANHOLE CONFORMS TO ASTM C-478
   JOINT CONFORMS TO ASTM C-443

STORM MANHOLE DETAIL

SCALE: NONE

RE-DESIGN SET 06-17-13

CONSULTANT:

REVISIONS:

DATE	DESCRIPTION	BY

APPROVED BY:

JAMES W. FRAZELL REGISTERED No. 17208 STATE OF INDIANA PROFESSIONAL ENGINEER 4/17/13

THIS DRAWING AND THE IDEAS, DESIGNS AND CONCEPTS CONTAINED HEREIN ARE THE EXCLUSIVE INTELLECTUAL PROPERTY OF TRIAD ASSOCIATES, INC., AND ARE NOT TO BE USED OR REPRODUCED, IN WHOLE OR IN PART, WITHOUT THE WRITTEN CONSENT OF TRIAD ASSOCIATES, INC.

TRIAD ASSOCIATES INC.
5835 LAWTON LOOP EAST DRIVE
INDIANAPOLIS, INDIANA 46216
PHONE: 317-377-5230 FAX: 317-377-5241

DESIGNED FOR:

THE TOWN OF SWEETSER
GRANT COUNTY, INDIANA

SHEET TITLE:

MISCELLANEOUS SITE DETAILS

JOB NUMBER: 201115D	
SCALE: AS NOTED	CHECKED BY: M.P.H.
PLOT SCALE: 1=32	PLOT DATE: 06/17/13
DRAWN BY: D.A.P.	DATE: MAY, 2013
DESIGNED BY: James W. Frazell, P.E.	
DRAWING NAME: 201115D-Det02REV2	

SHEET No.

P10

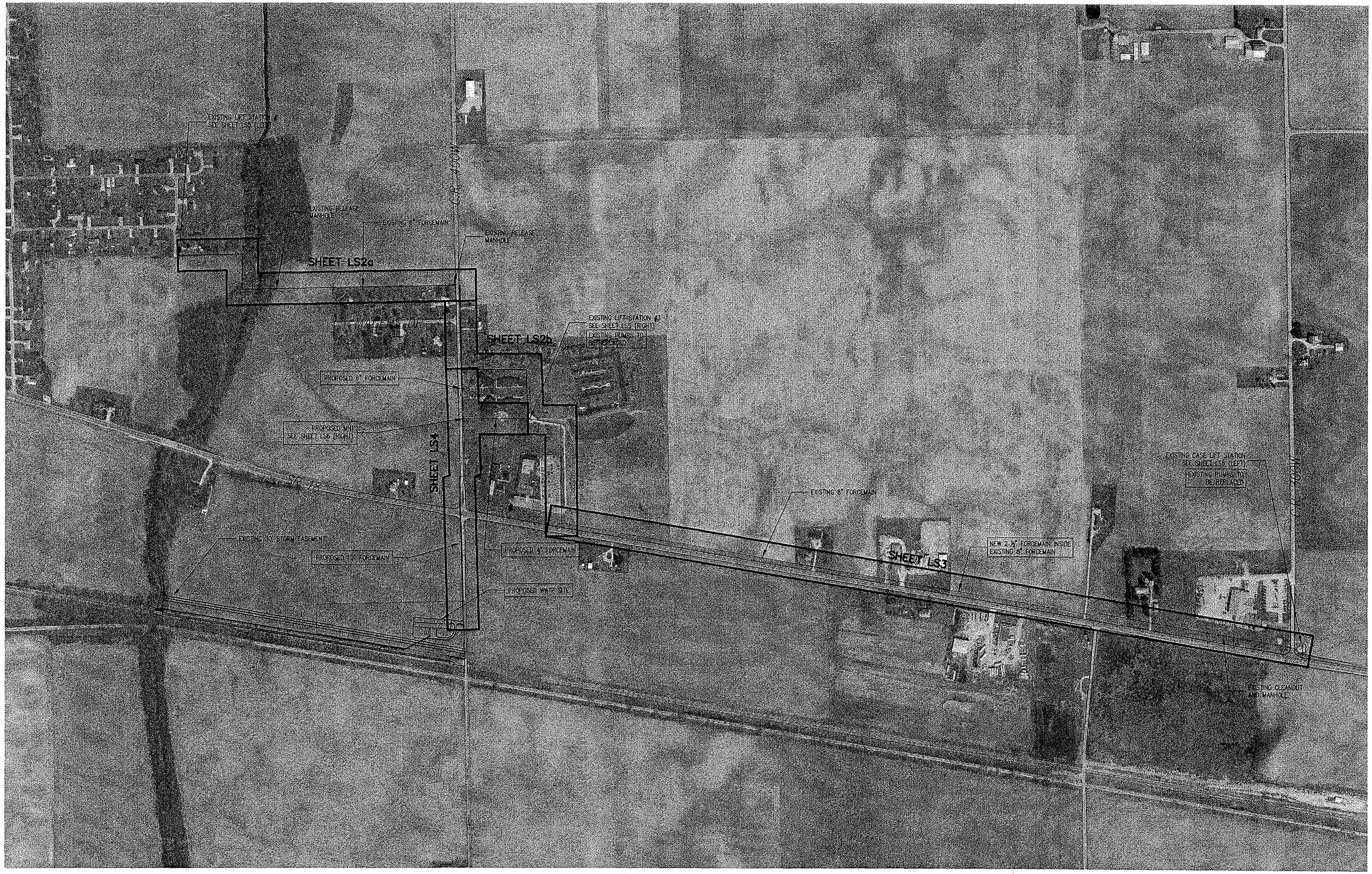

SWEETSER

SCALE: 1"=300'

NORTH

GENERAL NOTES:

1. ALL UTILITY LOCATIONS AND DEPTHS ARE APPROXIMATE. THE CONTRACTOR SHALL HAVE ALL UTILITIES AND DEPTHS OF INVERTS OF EXISTING SEWERS FIELD VERIFIED AND MARKED PRIOR TO CONSTRUCTION.
2. CONTRACTOR SHALL MAINTAIN A MINIMUM 10'–0" HORIZONTAL AND 18" VERTICAL SEPARATION BETWEEN SEWER AND WATER MAINS.
3. ALL PROPOSED TOP OF CASTING ELEVATIONS ARE APPROXIMATE. THE CONTRACTOR SHALL ADJUST FINAL ELEVATIONS AS REQUIRED TO BE FLUSH WITH PAVEMENT.
4. ALL SEWER TRENCHES SHALL BE BACKFILLED WITH FULL DEPTH COMPACTED GRANULAR BACKFILL ("B" BORROW) UNDER OR WITHIN 5' OF EDGE OF PAVEMENT.
5. THE CONTRACTOR SHALL VISIT THE SITE PRIOR TO BID TO BECOME FAMILIAR WITH ALL SITE CONDITIONS.
6. THE CONTRACTOR SHALL PROVIDE THE REQUIRED MEANS FOR MAINTAINING SAFE TRAFFIC AT ALL TIMES.
7. CONTRACTOR SHALL RESTORE ALL DISTURBED LAWN AREAS, STREETS, WALKS, DRIVES, ETC. AS SHOWN ON DRAWINGS, IN THE SPECIFICATIONS, OR TO AT LEAST PRE–EXISTING CONDITIONS.
8. ALL UTILITY CROSSINGS SHALL BE PROTECTED AND SUPPORTED WITH GRANULAR FILL OR CONCRETE AS REQUIRED PER THE DETAIL SHEET.

LEGEND:

	TREE		POWER POLE
	EXISTING FIRE HYDRANT		MISCELLANEOUS POSTS
	PROPOSED FIRE HYDRANT		LIGHT POLE
MB	MAILBOX		INLET
	SIGN	A	ASPHALT SURFACE
+1085.2	SPOT SHOT	C	CONCRETE SURFACE
1085	CONTOUR	S	STONE SURFACE
X X	FENCE	SC	NEW GRAVITY SERVICE CONNECTION
MH	EXIST. COMBINATION SEWER w/ MANHOLE		PROPOSED SANITARY GRAVITY

GP	PROPOSED GRINDER PUMP		EXISTING COMBINATION MANHOLE
	PROPOSED SANITARY FORCEMAIN		EXISTING SANITARY MANHOLE
V V V	PROPOSED WATER		EXISTING STORM MANHOLE
V 6" V V V	EXISTING WATER LINE		EXISTING TELEPHONE/FIBER OPTIC MANHOLE
10'	EXISTING ROAD DRAIN		EXISTING SANITARY SEWER
GAS 2" GAS GAS GAS	GAS LINE		EXISTING STORM SEWER
T T T T	UNDERGROUND TELEPHONE LINE		APPROX. PROPERTY LINE
FO FO FO FO	EXISTING FIBER OPTIC LINE		PROPOSED UTILITY EASEMENT
	APPROX. RIGHT–OF–WAY		EXISTING UTILITY EASEMENT

RE-DESIGN SET 06-17-13

CONSULTANT:

REVISIONS:

DATE	DESCRIPTION	BY
5/17/13	PROJECT REVISIONS	JRN

APPROVED BY:

JAMES W. FRAZELL REGISTERED No. 17208 STATE OF INDIANA PROFESSIONAL ENGINEER 6/17/13

THIS DRAWING AND THE IDEAS, DESIGNS AND CONCEPTS CONTAINED HEREIN ARE THE EXCLUSIVE INTELLECTUAL PROPERTY OF TRIAD ASSOCIATES, INC., AND ARE NOT TO BE USED OR REPRODUCED, IN WHOLE OR IN PART, WITHOUT THE WRITTEN CONSENT OF TRIAD ASSOCIATES, INC.

TRIAD ASSOCIATES INC.
5835 LAWTON LOOP EAST DRIVE
INDIANAPOLIS, INDIANA 46216
PHONE: 317-377-5230 FAX: 317-377-5241

DESIGNED FOR:

THE TOWN OF SWEETSER
GRANT COUNTY, INDIANA

SHEET TITLE:

PROPOSED FORCEMAIN/LIFT STATION
SITE PLAN

JOB NUMBER: 201115D	
SCALE: 1" = 300'	CHECKED BY:
PLOT SCALE: 1 = 1	PLOT DATE: 6/17/13
DRAWN BY: JRN	DATE: MAY, 2013
DESIGNED BY: James W. Frazell, P.E.	
DRAWING NAME: 201115D-LIFTSTATIONSITEREV2	

SHEET No.

LS1

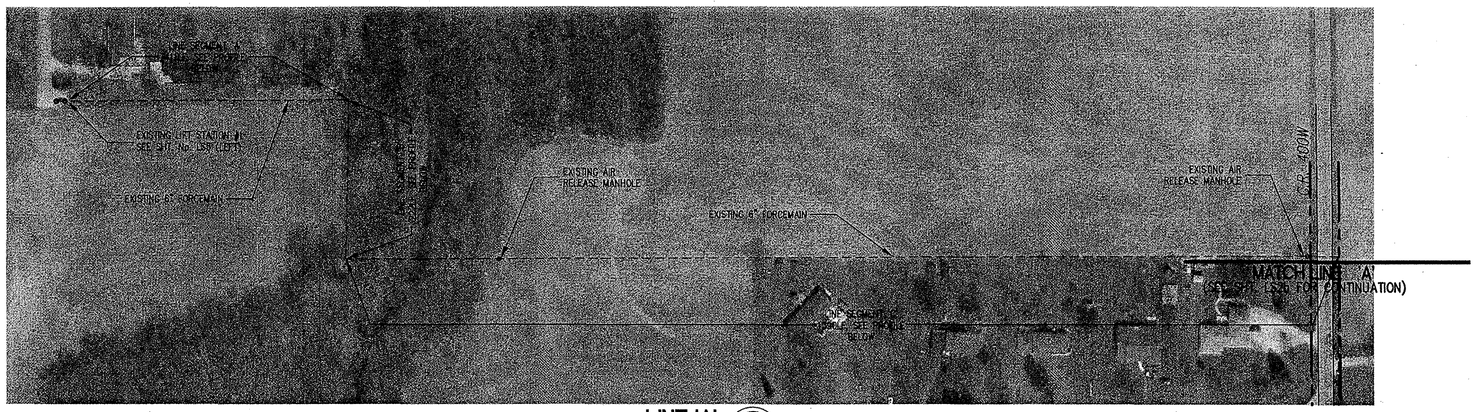

LINE 'A'

SCALE: 1"=100'

NORTH

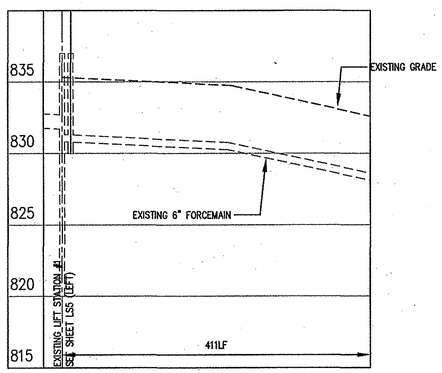

SEGMENT 'A'

SCALE: 1"=100'

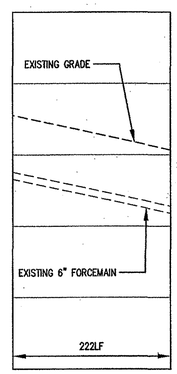

SEGMENT 'B'

SCALE: 1"=100'

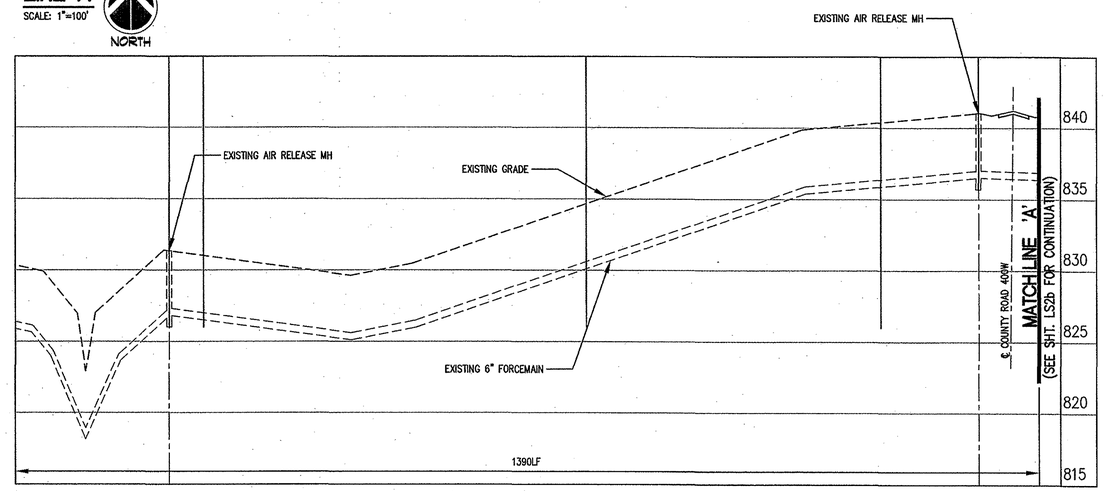

SEGMENT 'C'

SCALE: 1"=100'

GENERAL NOTES:

1. ALL UTILITY LOCATIONS AND DEPTHS ARE APPROXIMATE. THE CONTRACTOR SHALL HAVE ALL UTILITIES AND DEPTHS OF INVERTS OF EXISTING SEWERS FIELD VERIFIED AND MARKED PRIOR TO CONSTRUCTION.
2. CONTRACTOR SHALL MAINTAIN A MINIMUM 10'-0" HORIZONTAL AND 18" VERTICAL SEPARATION BETWEEN SEWER AND WATER MAINS.
3. ALL PROPOSED TOP OF CASTING ELEVATIONS ARE APPROXIMATE. THE CONTRACTOR SHALL ADJUST FINAL ELEVATIONS AS REQUIRED TO BE FLUSH WITH PAVEMENT.
4. ALL SEWER TRENCHES SHALL BE BACKFILLED WITH FULL DEPTH COMPACTED GRANULAR BACKFILL ("B" BORROW) UNDER OR WITHIN 5' OF EDGE OF PAVEMENT.
5. THE CONTRACTOR SHALL VISIT THE SITE PRIOR TO BID TO BECOME FAMILIAR WITH ALL SITE CONDITIONS.
6. THE CONTRACTOR SHALL PROVIDE THE REQUIRED MEANS FOR MAINTAINING SAFE TRAFFIC AT ALL TIMES.
7. CONTRACTOR SHALL RESTORE ALL DISTURBED LAWN AREAS, STREETS, WALKS, DRIVES, ETC. AS SHOWN ON DRAWINGS, IN THE SPECIFICATIONS, OR TO AT LEAST PRE-EXISTING CONDITIONS.
8. ALL UTILITY CROSSINGS SHALL BE PROTECTED AND SUPPORTED WITH GRANULAR FILL OR CONCRETE AS REQUIRED PER THE DETAIL SHEET.

LEGEND:

	TREE		POWER POLE	GP	PROPOSED GRINDER PUMP		EXISTING COMBINATION MANHOLE
	EXISTING FIRE HYDRANT		MISCELLANEOUS POSTS		PROPOSED SANITARY FORCEMAIN		EXISTING SANITARY MANHOLE
	PROPOSED FIRE HYDRANT		LIGHT POLE	V	PROPOSED WATER		EXISTING STORM MANHOLE
MB	MAILBOX		INLET	6" V	EXISTING WATER LINE		EXISTING TELEPHONE/FIBER OPTIC MANHOLE
	SIGN	A	ASPHALT SURFACE	10"	EXISTING ROAD DRAIN		EXISTING SANITARY SEWER
+1085.2	SPOT SHOT	C	CONCRETE SURFACE	2" GAS	GAS LINE		EXISTING STORM SEWER
1085	CONTOUR	S	STONE SURFACE	T	UNDERGROUND TELEPHONE LINE		APPROX. PROPERTY LINE
X	FENCE	SC	NEW GRAVITY SERVICE CONNECTION	FO	EXISTING FIBER OPTIC LINE		PROPOSED UTILITY EASEMENT
MH	EXIST. COMBINATION SEWER w/ MANHOLE		PROPOSED SANITARY GRAVITY		APPROX. RIGHT-OF-WAY		EXISTING UTILITY EASEMENT

RE-DESIGN SET 06-17-13

CONSULTANT:

REVISIONS:

DATE	DESCRIPTION	BY
5/17/13	PROJECT REVISIONS	JRN

APPROVED BY:

JAMES W. FRAZELL REGISTERED No. 17208 STATE OF INDIANA PROFESSIONAL ENGINEER

6/17/13

THIS DRAWING AND THE IDEAS, DESIGNS AND CONCEPTS CONTAINED HEREIN ARE THE EXCLUSIVE INTELLECTUAL PROPERTY OF TRIAD ASSOCIATES, INC., AND ARE NOT TO BE USED OR REPRODUCED, IN WHOLE OR IN PART, WITHOUT THE WRITTEN CONSENT OF TRIAD ASSOCIATES, INC.

TRIAD ASSOCIATES INC.
5835 LAWTON LOOP EAST DRIVE
INDIANAPOLIS, INDIANA 46216
PHONE: 317-377-5230 FAX: 317-377-5241

DESIGNED FOR:

THE TOWN OF SWEETSER
GRANT COUNTY, INDIANA

SHEET TITLE:

EXISTING FORCEMAIN PLAN AND PROFILE

JOB NUMBER: 201115D	
SCALE: 1" = 100'	CHECKED BY:
PLOT SCALE: 1 = 1	PLOT DATE: 6/17/13
DRAWN BY: JRN	DATE: JUNE, 2012
DESIGNED BY: James W. Frazell, P.E.	
DRAWING NAME: 201115D-LIFTSTATIONSITEREV2	

SHEET No.

LS2a

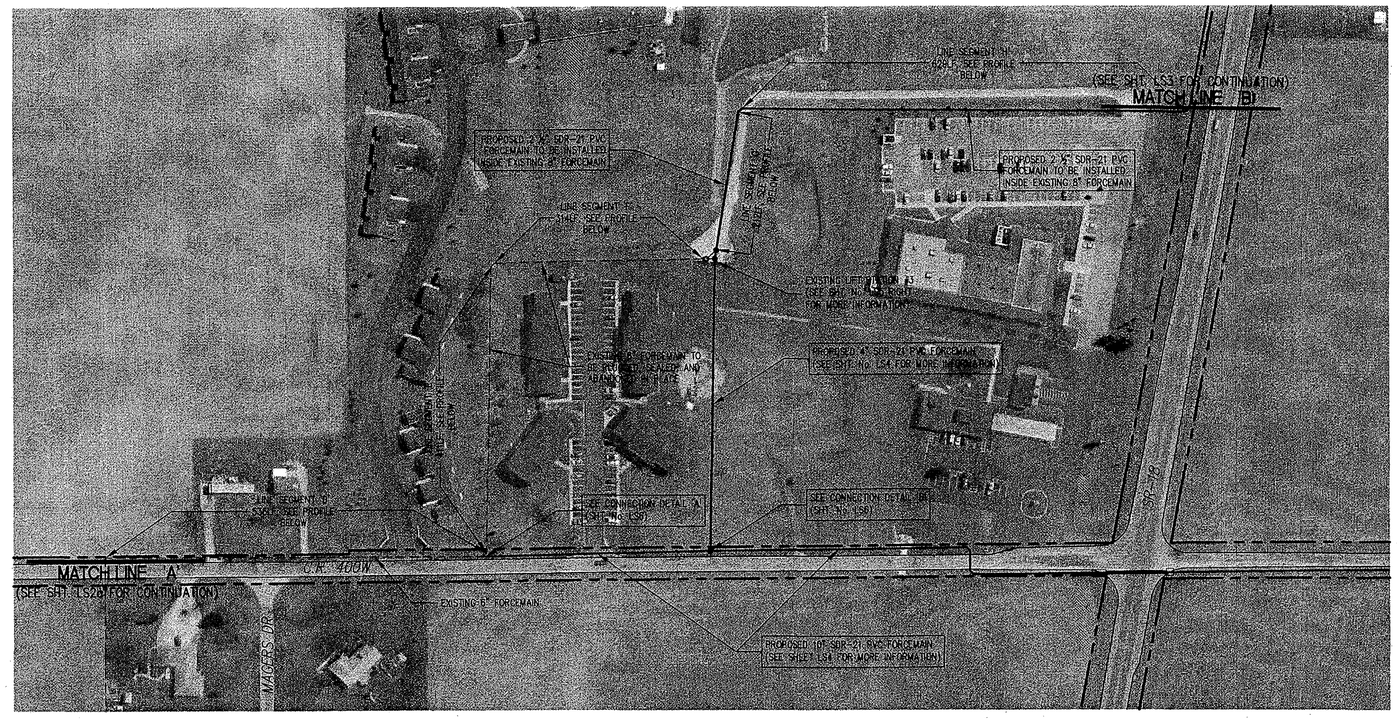

LINE 'B'

SCALE: 1"=100'

NORTH

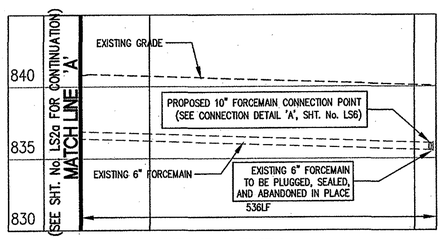

SEGMENT 'D'

SCALE: 1"=100'

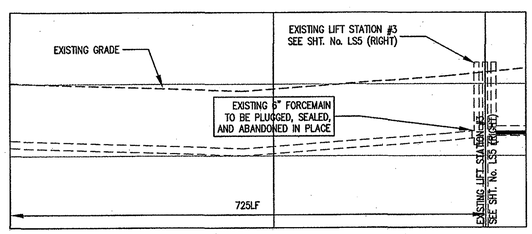

SEGMENTS 'E' + 'F'

SCALE: 1"=100'

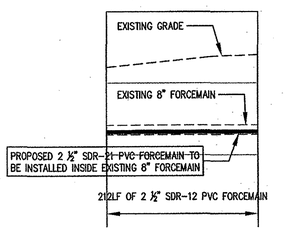

SEGMENT 'G'

SCALE: 1"=100'

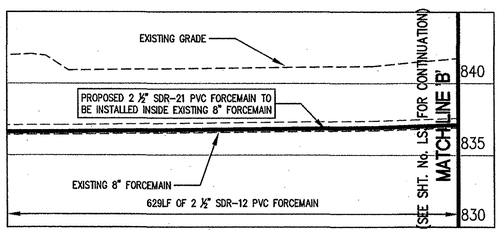

SEGMENT 'H'

SCALE: 1"=100'

GENERAL NOTES:

1. ALL UTILITY LOCATIONS AND DEPTHS ARE APPROXIMATE. THE CONTRACTOR SHALL HAVE ALL UTILITIES AND DEPTHS OF INVERTS OF EXISTING SEWERS FIELD VERIFIED AND MARKED PRIOR TO CONSTRUCTION.
2. CONTRACTOR SHALL MAINTAIN A MINIMUM 10'-0" HORIZONTAL AND 18" VERTICAL SEPARATION BETWEEN SEWER AND WATER MAINS.
3. ALL PROPOSED TOP OF CASTING ELEVATIONS ARE APPROXIMATE. THE CONTRACTOR SHALL ADJUST FINAL ELEVATIONS AS REQUIRED TO BE FLUSH WITH PAVEMENT.
4. ALL SEWER TRENCHES SHALL BE BACKFILLED WITH FULL DEPTH COMPACTED GRANULAR BACKFILL ("B" BORROW) UNDER OR WITHIN 5' OF EDGE OF PAVEMENT.
5. THE CONTRACTOR SHALL VISIT THE SITE PRIOR TO BID TO BECOME FAMILIAR WITH ALL SITE CONDITIONS.
6. THE CONTRACTOR SHALL PROVIDE THE REQUIRED MEANS FOR MAINTAINING SAFE TRAFFIC AT ALL TIMES.
7. CONTRACTOR SHALL RESTORE ALL DISTURBED LAWN AREAS, STREETS, WALKS, DRIVES, ETC. AS SHOWN ON DRAWINGS, IN THE SPECIFICATIONS, OR TO AT LEAST PRE-EXISTING CONDITIONS.
8. ALL UTILITY CROSSINGS SHALL BE PROTECTED AND SUPPORTED WITH GRANULAR FILL OR CONCRETE AS REQUIRED PER THE DETAIL SHEET.

LEGEND:

	TREE		POWER POLE	GP	PROPOSED GRINDER PUMP		EXISTING COMBINATION MANHOLE
	EXISTING FIRE HYDRANT		MISCELLANEOUS POSTS		PROPOSED SANITARY FORCEMAIN		EXISTING SANITARY MANHOLE
	PROPOSED FIRE HYDRANT		LIGHT POLE	V	PROPOSED WATER		EXISTING STORM MANHOLE
MB	MAILBOX		INLET	V 6"	EXISTING WATER LINE		EXISTING TELEPHONE/FIBER OPTIC MANHOLE
	SIGN	A	ASPHALT SURFACE	10"	EXISTING ROAD DRAIN		EXISTING SANITARY SEWER
+1085.2	SPOT SHOT	C	CONCRETE SURFACE	GAS 2" GAS	GAS LINE		EXISTING STORM SEWER
1085	CONTOUR	S	STONE SURFACE	T	UNDERGROUND TELEPHONE LINE		APPROX. PROPERTY LINE
X	FENCE	SC	NEW GRAVITY SERVICE CONNECTION	FO	EXISTING FIBER OPTIC LINE		PROPOSED UTILITY EASEMENT
MH	EXIST. COMBINATION SEWER w/ MANHOLE		PROPOSED SANITARY GRAVITY		APPROX. RIGHT-OF-WAY		EXISTING UTILITY EASEMENT

RE-DESIGN SET 06-17-13

CONSULTANT:

REVISIONS:

DATE	DESCRIPTION	BY
5/17/13	PROJECT REVISIONS	JRN

APPROVED BY:

JAMES W. FRAZELL REGISTERED No. 17208 STATE OF INDIANA PROFESSIONAL ENGINEER 6/17/13

THIS DRAWING AND THE IDEAS, DESIGNS AND CONCEPTS CONTAINED HEREIN ARE THE EXCLUSIVE INTELLECTUAL PROPERTY OF TRIAD ASSOCIATES, INC., AND ARE NOT TO BE USED OR REPRODUCED, IN WHOLE OR IN PART, WITHOUT THE WRITTEN CONSENT OF TRIAD ASSOCIATES, INC.

TRIAD ASSOCIATES INC.
5835 LAWTON LOOP EAST DRIVE
INDIANAPOLIS, INDIANA 46216
PHONE: 317-377-5230 FAX: 317-377-5241

DESIGNED FOR:

THE TOWN OF SWEETSER
GRANT COUNTY, INDIANA

SHEET TITLE:

EXISTING FORCEMAIN PLAN AND PROFILE

JOB NUMBER: 201115D	
SCALE: 1" = 100'	CHECKED BY:
PLOT SCALE: 1 = 1	PLOT DATE: 6/17/13
DRAWN BY: JRN	DATE: JUNE, 2012
DESIGNED BY: James W. Frazell, P.E.	
DRAWING NAME: 201115D-LIFTSTATIONSITEREV2	

SHEET No.

LS2b

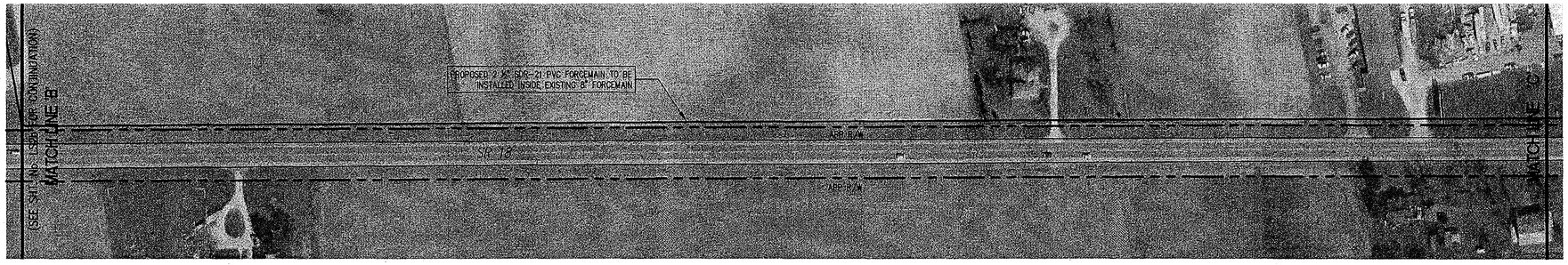

SEGMENT 'I'

SCALE: 1"=100'

NORTH

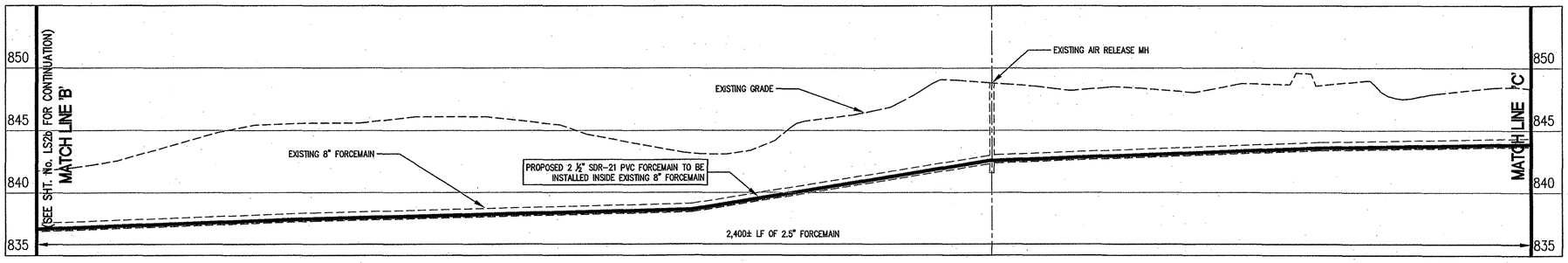

SEGMENT 'I' CONT'D

SCALE: 1"=100'

NORTH

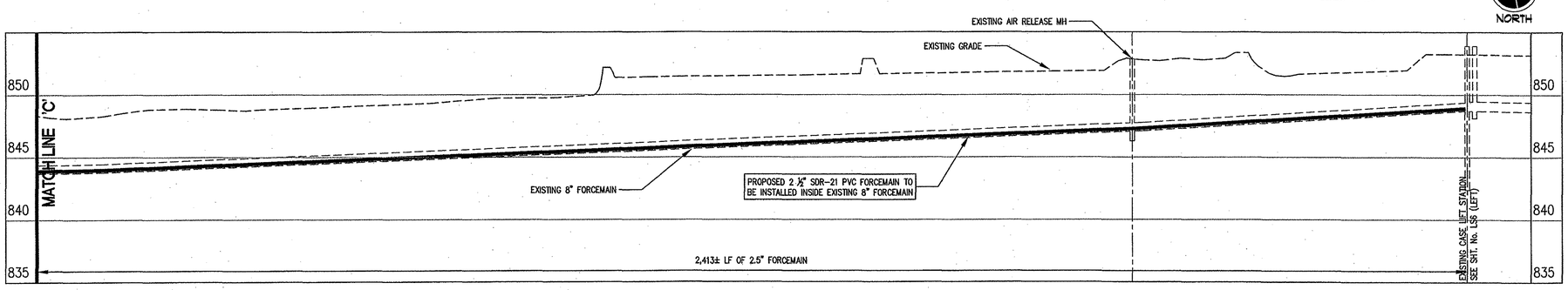

GENERAL NOTES:

1. ALL UTILITY LOCATIONS AND DEPTHS ARE APPROXIMATE. THE CONTRACTOR SHALL HAVE ALL UTILITIES AND DEPTHS OF INVERTS OF EXISTING SEWERS FIELD VERIFIED AND MARKED PRIOR TO CONSTRUCTION.
2. CONTRACTOR SHALL MAINTAIN A MINIMUM 10'-0" HORIZONTAL AND 18" VERTICAL SEPARATION BETWEEN SEWER AND WATER MAINS.
3. ALL PROPOSED TOP OF CASTING ELEVATIONS ARE APPROXIMATE. THE CONTRACTOR SHALL ADJUST FINAL ELEVATIONS AS REQUIRED TO BE FLUSH WITH PAVEMENT.
4. ALL SEWER TRENCHES SHALL BE BACKFILLED WITH FULL DEPTH COMPACTED GRANULAR BACKFILL ("B" BORROW) UNDER OR WITHIN 5' OF EDGE OF PAVEMENT.
5. THE CONTRACTOR SHALL VISIT THE SITE PRIOR TO BID TO BECOME FAMILIAR WITH ALL SITE CONDITIONS.
6. THE CONTRACTOR SHALL PROVIDE THE REQUIRED MEANS FOR MAINTAINING SAFE TRAFFIC AT ALL TIMES.
7. CONTRACTOR SHALL RESTORE ALL DISTURBED LAWN AREAS, STREETS, WALKS, DRIVES, ETC. AS SHOWN ON DRAWINGS, IN THE SPECIFICATIONS, OR TO AT LEAST PRE-EXISTING CONDITIONS.
8. ALL UTILITY CROSSINGS SHALL BE PROTECTED AND SUPPORTED WITH GRANULAR FILL OR CONCRETE AS REQUIRED PER THE DETAIL SHEET.

LEGEND:

	TREE		POWER POLE	GP	PROPOSED GRINDER PUMP		EXISTING COMBINATION MANHOLE
	EXISTING FIRE HYDRANT		MISCELLANEOUS POSTS		PROPOSED SANITARY FORCEMAIN		EXISTING SANITARY MANHOLE
	PROPOSED FIRE HYDRANT		LIGHT POLE	V 6" V	PROPOSED WATER		EXISTING STORM MANHOLE
MB	MAILBOX		INLET	V 10" V	EXISTING WATER LINE		EXISTING TELEPHONE/FIBER OPTIC MANHOLE
	SIGN	A	ASPHALT SURFACE		EXISTING ROAD DRAIN		EXISTING SANITARY SEWER
1085.2	SPOT SHOT	C	CONCRETE SURFACE	GAS 2" GAS	GAS LINE		EXISTING STORM SEWER
1085	CONTOUR	S	STONE SURFACE	T	UNDERGROUND TELEPHONE LINE		APPROX. PROPERTY LINE
X	FENCE	SC	NEW GRAVITY SERVICE CONNECTION	FO	EXISTING FIBER OPTIC LINE		PROPOSED UTILITY EASEMENT
MH	EXIST. COMBINATION SEWER w/ MANHOLE		PROPOSED SANITARY GRAVITY		APPROX. RIGHT-OF-WAY		EXISTING UTILITY EASEMENT

RE-DESIGN SET 06-17-13

CONSULTANT:

REVISIONS:

DATE	DESCRIPTION	BY
5/17/13	PROJECT REVISIONS	JRN

APPROVED BY:

JAMES W. FRAZELL REGISTERED No. 17208 STATE OF INDIANA PROFESSIONAL ENGINEER 6/17/13

THIS DRAWING AND THE IDEAS, DESIGNS AND CONCEPTS CONTAINED HEREIN ARE THE EXCLUSIVE INTELLECTUAL PROPERTY OF TRIAD ASSOCIATES, INC., AND ARE NOT TO BE USED OR REPRODUCED, IN WHOLE OR IN PART, WITHOUT THE WRITTEN CONSENT OF TRIAD ASSOCIATES, INC.

TRIAD ASSOCIATES INC.
5835 LAWTON LOOP EAST DRIVE
INDIANAPOLIS, INDIANA 46216
PHONE: 317-377-5230 FAX: 317-377-5241

DESIGNED FOR:

THE TOWN OF SWEETSER
GRANT COUNTY, INDIANA

SHEET TITLE:

EXISTING FORCEMAIN PLAN AND PROFILE

JOB NUMBER: 201115D	
SCALE: 1" = 100'	CHECKED BY:
PLOT SCALE: 1 = 1	PLOT DATE: 6/17/13
DRAWN BY: JRN	DATE: MAY, 2013
DESIGNED BY: James W. Frazell, P.E.	
DRAWING NAME: 201115D-LIFTSTATIONSITEREV2	

SHEET No.

LS3

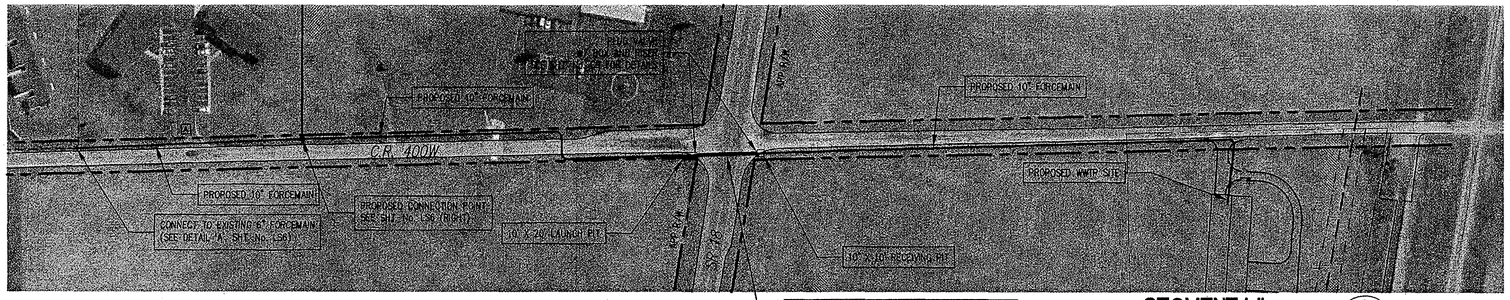

SEGMENT 'J'

SCALE: 1"=100'

NORTH

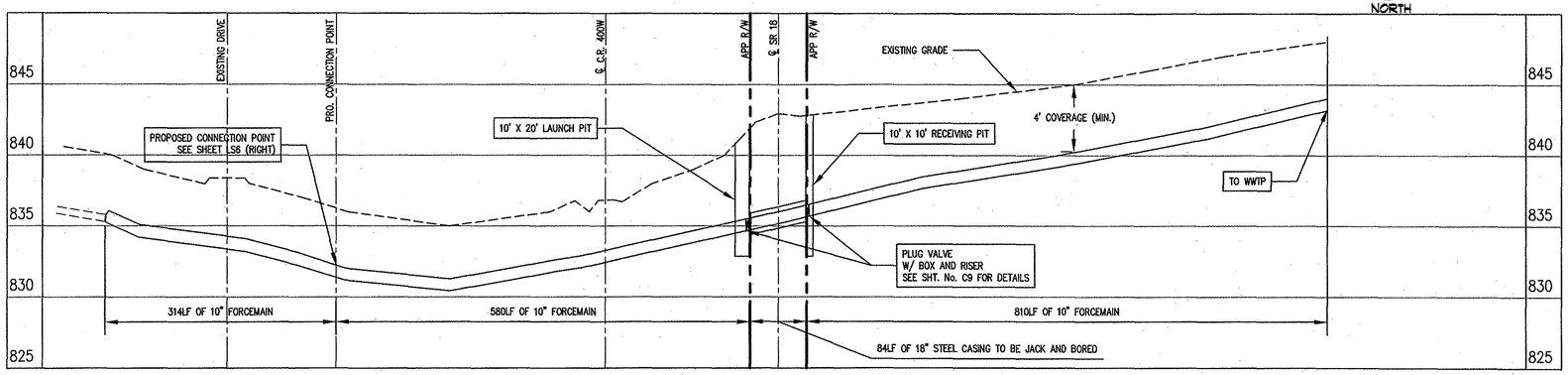

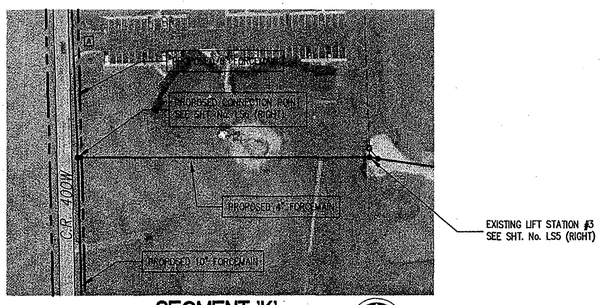

SEGMENT 'K'

SCALE: 1"=100'

NORTH

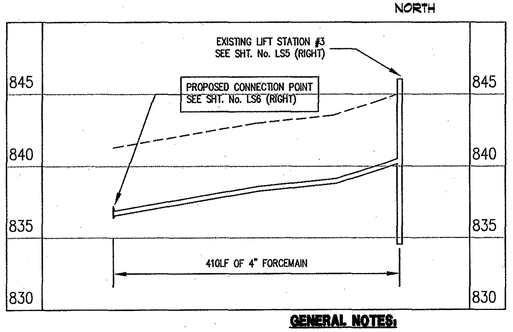

GENERAL NOTES:

1. ALL UTILITY LOCATIONS AND DEPTHS ARE APPROXIMATE. THE CONTRACTOR SHALL HAVE ALL UTILITIES AND DEPTHS OF INVERTS OF EXISTING SEWERS FIELD VERIFIED AND MARKED PRIOR TO CONSTRUCTION.
2. CONTRACTOR SHALL MAINTAIN A MINIMUM 10'-0" HORIZONTAL AND 18" VERTICAL SEPARATION BETWEEN SEWER AND WATER MAINS.
3. ALL PROPOSED TOP OF CASTING ELEVATIONS ARE APPROXIMATE. THE CONTRACTOR SHALL ADJUST FINAL ELEVATIONS AS REQUIRED TO BE FLUSH WITH PAVEMENT.
4. ALL SEWER TRENCHES SHALL BE BACKFILLED WITH FULL DEPTH COMPACTED GRANULAR BACKFILL ("B" BORROW) UNDER OR WITHIN 5' OF EDGE OF PAVEMENT.
5. THE CONTRACTOR SHALL VISIT THE SITE PRIOR TO BID TO BECOME FAMILIAR WITH ALL SITE CONDITIONS.
6. THE CONTRACTOR SHALL PROVIDE THE REQUIRED MEANS FOR MAINTAINING SAFE TRAFFIC AT ALL TIMES.
7. CONTRACTOR SHALL RESTORE ALL DISTURBED LAWN AREAS, STREETS, WALKS, DRIVES, ETC. AS SHOWN ON DRAWINGS, IN THE SPECIFICATIONS, OR TO AT LEAST PRE-EXISTING CONDITIONS.
8. ALL UTILITY CROSSINGS SHALL BE PROTECTED AND SUPPORTED WITH GRANULAR FILL OR CONCRETE AS REQUIRED PER THE DETAIL SHEET.

LEGEND:

TREE	POWER POLE	PROPOSED GRINDER PUMP	EXISTING COMBINATION MANHOLE
EXISTING FIRE HYDRANT	MISCELLANEOUS POSTS	PROPOSED SANITARY FORCEMAIN	EXISTING SANITARY MANHOLE
PROPOSED FIRE HYDRANT	LIGHT POLE	PROPOSED WATER	EXISTING STORM MANHOLE
MAILBOX	INLET	EXISTING WATER LINE	EXISTING TELEPHONE/FIBER OPTIC MANHOLE
SIGN	ASPHALT SURFACE	EXISTING ROAD DRAIN	EXISTING SANITARY SEWER
SPOT SHOT	CONCRETE SURFACE	GAS LINE	EXISTING STORM SEWER
CONTOUR	STONE SURFACE	UNDERGROUND TELEPHONE LINE	APPROX. PROPERTY LINE
FENCE	NEW GRAVITY SERVICE CONNECTION	EXISTING FIBER OPTIC LINE	PROPOSED UTILITY EASEMENT
EXIST. COMBINATION SEWER w/ MANHOLE	PROPOSED SANITARY GRAVITY	APPROX. RIGHT-OF-WAY	EXISTING UTILITY EASEMENT

RE-DESIGN SET 06-17-13

CONSULTANT:

REVISIONS:

DATE	DESCRIPTION	BY
5/17/13	PROJECT REVISIONS	JRN

APPROVED BY:

JAMES W. FRAZELL REGISTERED No. 17208 STATE OF INDIANA PROFESSIONAL ENGINEER 6/17/13

THIS DRAWING AND THE IDEAS, DESIGNS AND CONCEPTS CONTAINED HEREIN ARE THE EXCLUSIVE INTELLECTUAL PROPERTY OF TRIAD ASSOCIATES, INC., AND ARE NOT TO BE USED OR REPRODUCED, IN WHOLE OR IN PART, WITHOUT THE WRITTEN CONSENT OF TRIAD ASSOCIATES, INC.

TRIAD ASSOCIATES INC.
5835 LAWTON LOOP EAST DRIVE
INDIANAPOLIS, INDIANA 46216
PHONE: 317-377-5230 FAX: 317-377-5241

DESIGNED FOR:

THE TOWN OF SWEETSER
GRANT COUNTY, INDIANA

SHEET TITLE:

PROPOSED FORCEMAIN PLAN AND PROFILE

JOB NUMBER: 201115D	
SCALE: 1" = 100'	CHECKED BY:
PLOT SCALE: 1 = 1	PLOT DATE: 6/17/13
DRAWN BY: JRN	DATE: MAY, 2013
DESIGNED BY: James W. Frazell, P.E.	
DRAWING NAME: 201115D-LIFTSTATIONSITEREV2	

SHEET No.

LS4

GENERAL NOTES:

1. CONTRACTOR TO INSTALL ALL EQUIPMENT IN COMPLETE ACCORDANCE WITH ALL MANUFACTURER'S RECOMMENDATIONS.
2. ALL FASTENERS, SUPPORTS, ETC. TO BE STAINLESS STEEL.
3. REFER TO SPECIFICATIONS FOR FURTHER INFORMATION.
4. ALL CONCRETE TO BE MINIMUM F'c = 4000 PSI. ALL REINFORCING STEEL TO BE MINIMUM Fy = 60,000 PSI.
5. SEE STRUCTURAL DETAIL SHEET AND ELECTRICAL/MECHANICAL SHEETS FOR FURTHER DETAIL.
6. SEE PLANT CONTROL/MONITOR SPECIFICATIONS FOR NECESSARY EQUIPMENT COORDINATION.
7. SEE DETAIL SHEET FOR TYPICAL WALL PENETRATION DETAILS.
8. ALL FERROUS METAL SURFACES TO BE PREPARED AND PAINTED IN ACCORDANCE WITH THE SPECIFICATIONS.
9. SEE DETAIL SHEET FOR GRATING DETAILS.
10. CONTRACTOR TO COORDINATE WITH ALL OTHER APPLICABLE PLAN SHEETS AND SPECIFICATIONS.
11. CONTRACTOR RESPONSIBLE FOR TRANSFERRING ALL SUITABLE TREATMENT MATERIAL FROM EXISTING TANKS TO THE PROPOSED TANKS.
12. CONTRACTOR TO VERIFY EQUIPMENT MOUNTING ELEVATIONS AND DIMENSIONS PRIOR TO CONSTRUCTION.
13. CONTRACTOR IS TO VISIT THE SITE PRIOR TO CONSTRUCTION IN ORDER TO IDENTIFY ANY EXISTING CONFLICTS TO BE ADDRESSED.

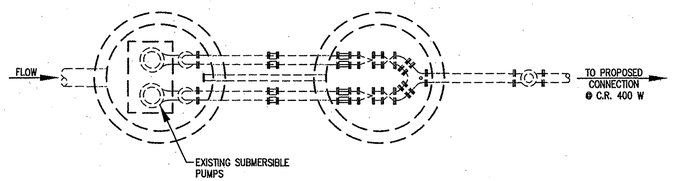

PLAN VIEW

NORTH

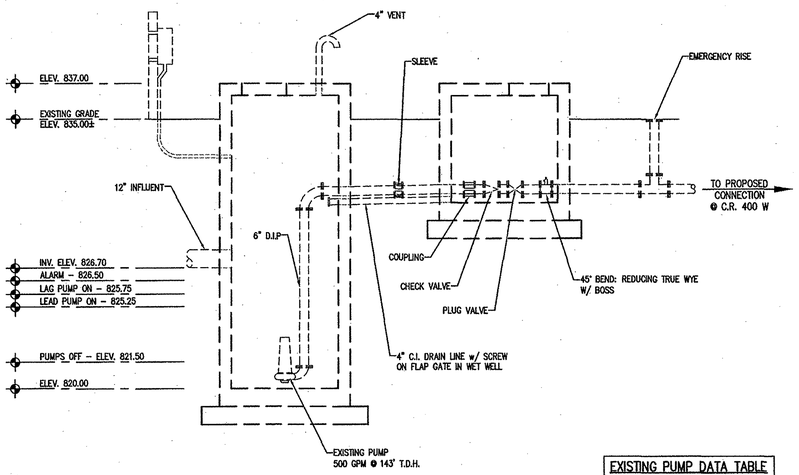

SECTION

EXISTING PUMP DATA TABLE	
CAPACITY	500
TDH	143
HP(min.)	60
RPM	VARIABLE
VOLTAGE	230/460
PHASE	3
TYPE	NON-CLOG
DISCHARGE	6"

NOTE:
CONTRACTOR IS TO FIELD VERIFY ALL LIFT STATION INFORMATION PRIOR TO CONSTRUCTION.

LIFT STATION #1

NOT TO SCALE

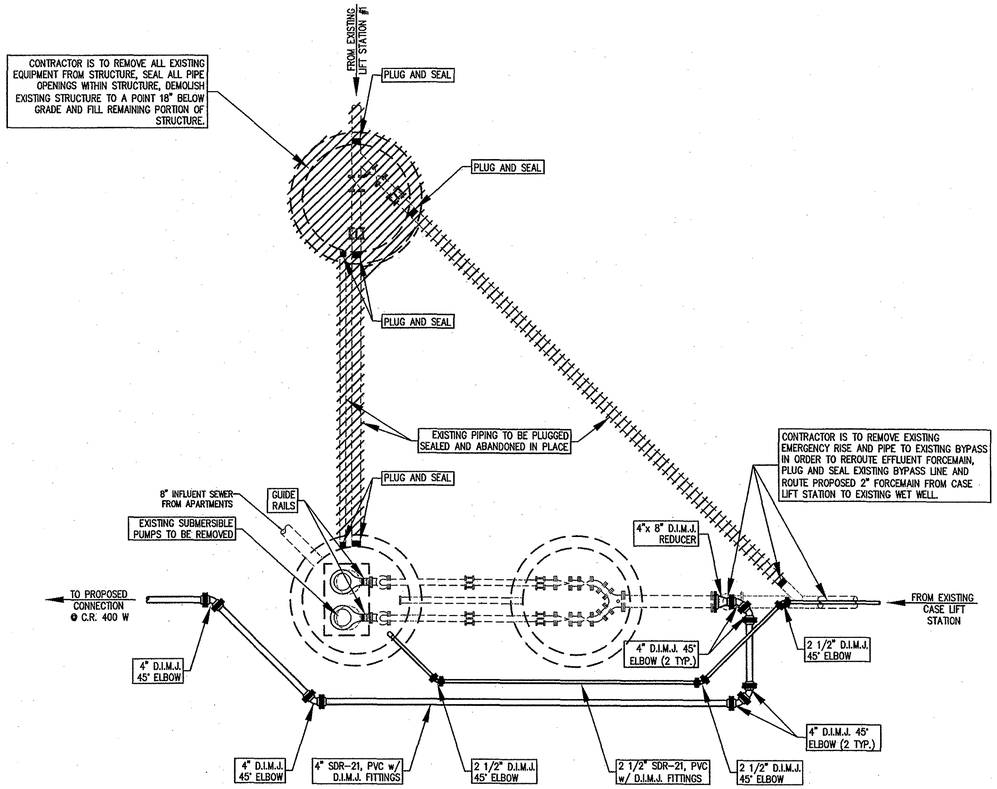

PLAN VIEW

NORTH

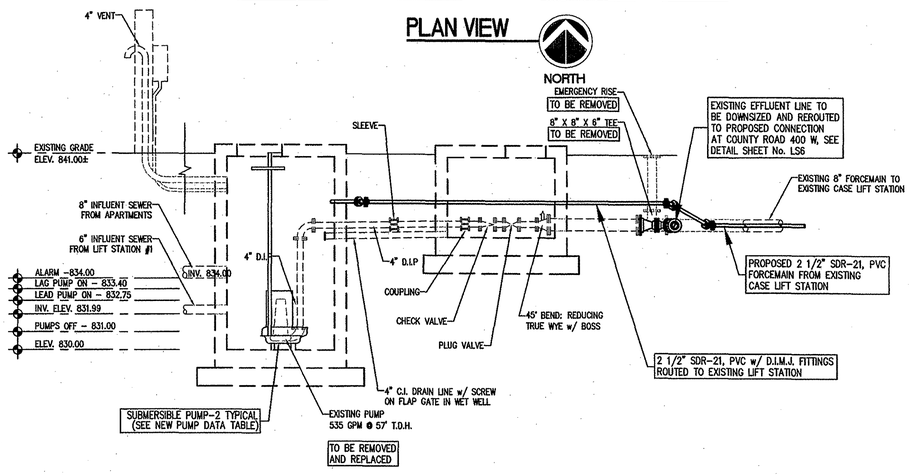

SECTION

NEW PUMP DATA TABLE	
CAPACITY	100
TDH	35
HP(min.)	5
RPM	1750
VOLTAGE	230/460
PHASE	3
TYPE	NON-CLOG
DISCHARGE	4"

LEGEND

DENOTES EQUIPMENT TO BE REMOVED

NOTE:
CONTRACTOR IS TO FIELD VERIFY ALL LIFT STATION INFORMATION PRIOR TO CONSTRUCTION.

LIFT STATION #3

NOT TO SCALE

RE-DESIGN SET 06-17-13

CONSULTANT:

REVISIONS:

DATE	DESCRIPTION	BY
5/17/13	PROJECT REVISIONS	JRN

APPROVED BY:

JAMES W. FRAZELL REGISTERED No. 17208 STATE OF INDIANA PROFESSIONAL ENGINEER

6/17/13

THIS DRAWING AND THE IDEAS, DESIGNS AND CONCEPTS CONTAINED HEREIN ARE THE EXCLUSIVE INTELLECTUAL PROPERTY OF TRIAD ASSOCIATES, INC., AND ARE NOT TO BE USED OR REPRODUCED, IN WHOLE OR IN PART, WITHOUT THE WRITTEN CONSENT OF TRIAD ASSOCIATES, INC.

TRIAD ASSOCIATES INC.
5835 LAWTON LOOP EAST DRIVE
INDIANAPOLIS, INDIANA 46216
PHONE: 317-377-5230 FAX: 317-377-5241

DESIGNED FOR:

THE TOWN OF SWEETSER
GRANT COUNTY, INDIANA

SHEET TITLE:

PROPOSED LIFT STATION SITE AND DETAILS

JOB NUMBER:	
SCALE: AS NOTED	CHECKED BY: M.P.H.
PLOT SCALE: 1=48	PLOT DATE: 06/17/13
DRAWN BY: J.R.N.	DATE: MAY, 2013
DESIGNED BY: James W. Frazell, P.E.	
DRAWING NAME: 201115D-LiftStationStrucREV2	

SHEET No.

LS5

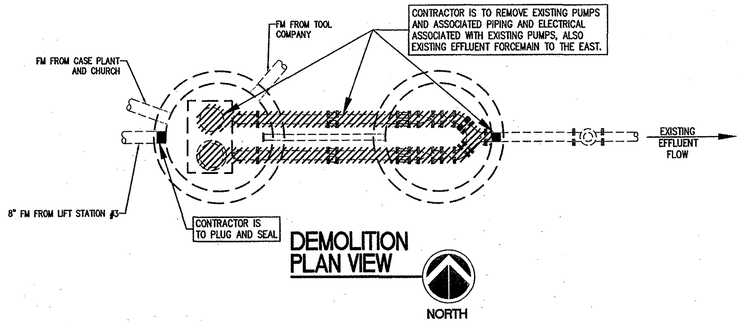

DEMOLITION PLAN VIEW

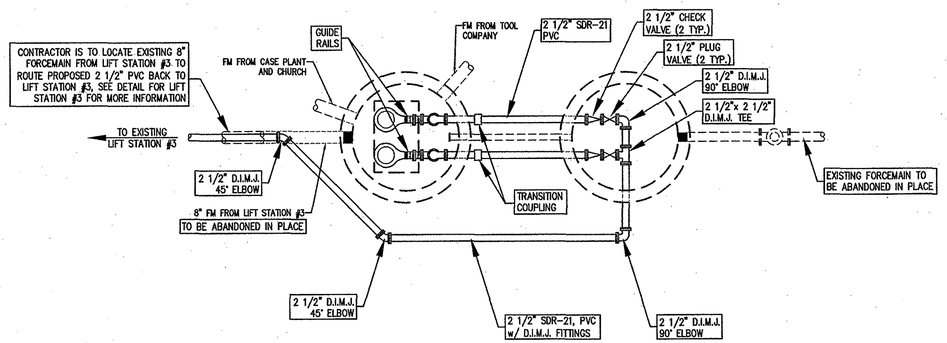

PROPOSED PLAN VIEW

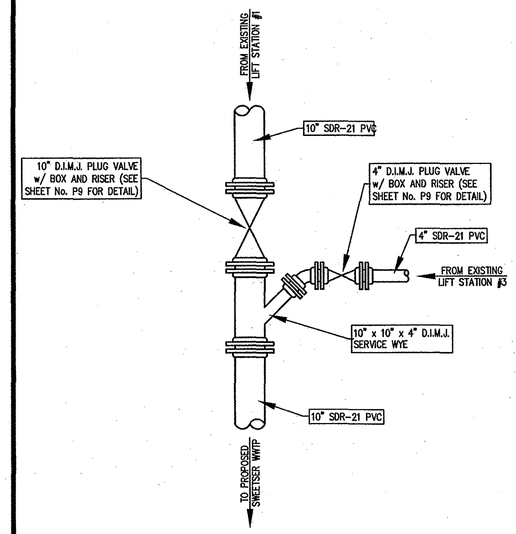

PROPOSED CONNECTION DETAIL 'A' AT COUNTY ROAD 400 W

NOT TO SCALE

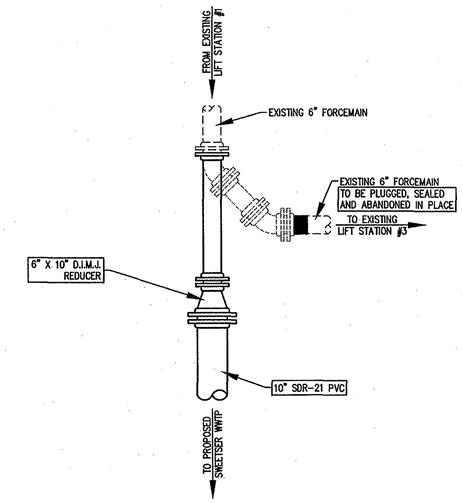

PROPOSED CONNECTION DETAIL 'B' AT COUNTY ROAD 400 W

NOT TO SCALE

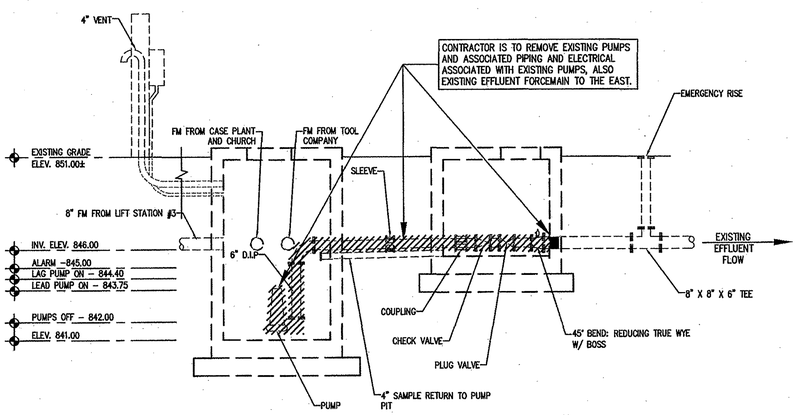

DEMOLITION SECTION

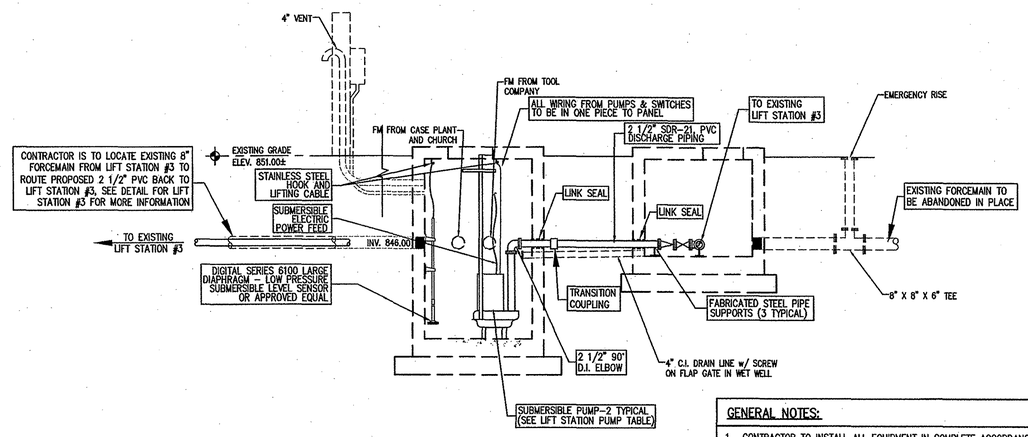

PROPOSED SECTION

LEGEND

DENOTES EQUIPMENT TO BE REMOVED

NOTE:
CONTRACTOR IS TO FIELD VERIFY ALL LIFT STATION INFORMATION PRIOR TO CONSTRUCTION.

CASE LIFT STATION

NOT TO SCALE

NEW PUMP DATA TABLE

CAPACITY	35
TDH	81
HP(min.)	5
RPM	3475
VOLTAGE	230/460
PHASE	3
TYPE	GRINDER
DISCHARGE	2 1/2"

GENERAL NOTES:

1. CONTRACTOR TO INSTALL ALL EQUIPMENT IN COMPLETE ACCORDANCE WITH ALL MANUFACTURER'S RECOMMENDATIONS.
2. ALL FASTENERS, SUPPORTS, ETC. TO BE STAINLESS STEEL.
3. REFER TO SPECIFICATIONS FOR FURTHER INFORMATION.
4. ALL CONCRETE TO BE MINIMUM F'c = 4000 PSI. ALL REINFORCING STEEL TO BE MINIMUM Fy = 60,000 PSI.
5. SEE STRUCTURAL DETAIL SHEET AND ELECTRICAL/MECHANICAL SHEETS FOR FURTHER DETAIL.
6. SEE PLANT CONTROL/MONITOR SPECIFICATIONS FOR NECESSARY EQUIPMENT COORDINATION.
7. SEE DETAIL SHEET FOR TYPICAL WALL PENETRATION DETAILS.
8. ALL FERROUS METAL SURFACES TO BE PREPARED AND PAINTED IN ACCORDANCE WITH THE SPECIFICATIONS.
9. SEE DETAIL SHEET FOR GRATING DETAILS.
10. CONTRACTOR TO COORDINATE WITH ALL OTHER APPLICABLE PLAN SHEETS AND SPECIFICATIONS.
11. CONTRACTOR RESPONSIBLE FOR TRANSFERRING ALL SUITABLE TREATMENT MATERIAL FROM EXISTING TANKS TO THE PROPOSED TANKS.
12. CONTRACTOR TO VERIFY EQUIPMENT MOUNTING ELEVATIONS AND DIMENSIONS PRIOR TO CONSTRUCTION.
13. CONTRACTOR IS TO VISIT THE SITE PRIOR TO CONSTRUCTION IN ORDER TO IDENTIFY ANY EXISTING CONFLICTS TO BE ADDRESSED.

RE-DESIGN SET 06-17-13

CONSULTANT:

REVISIONS:

DATE	DESCRIPTION	BY
5/17/13	PROJECT REVISIONS	JRN

APPROVED BY:

JAMES W. FRAZELL REGISTERED No. 17208 STATE OF INDIANA PROFESSIONAL ENGINEER

6/7/13

THIS DRAWING AND THE IDEAS, DESIGNS AND CONCEPTS CONTAINED HEREIN ARE THE EXCLUSIVE INTELLECTUAL PROPERTY OF TRIAD ASSOCIATES, INC., AND ARE NOT TO BE USED OR REPRODUCED, IN WHOLE OR IN PART, WITHOUT THE WRITTEN CONSENT OF TRIAD ASSOCIATES, INC.

TRIAD ASSOCIATES INC.
5835 LAWTON LOOP EAST DRIVE
INDIANAPOLIS, INDIANA 46216
PHONE: 317-377-5230 FAX: 317-377-5241

DESIGNED FOR:

THE TOWN OF SWEETSER
GRANT COUNTY, INDIANA

SHEET TITLE:

PROPOSED LIFT STATION SITE AND DETAILS

JOB NUMBER:	
SCALE: AS NOTED	CHECKED BY: M.P.H.
PLOT SCALE: 1=48	PLOT DATE: 06/17/13
DRAWN BY: J.R.N.	DATE: MAY, 2013
DESIGNED BY: James W. Frazell, P.E.	
DRAWING NAME: 201115D-LiftStationStrucREV2	

SHEET No.

LS6

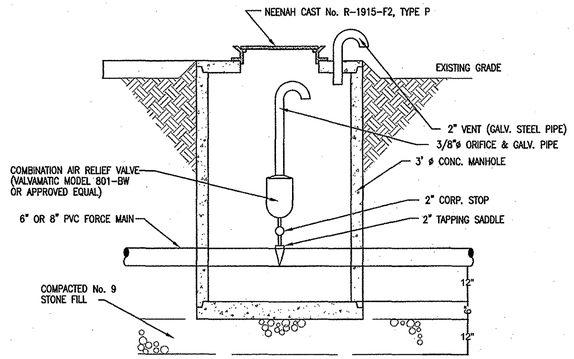

AIR/VAC RELIEF STRUCTURE

NOT TO SCALE

PIPE SIZE	BELOW 8"	8" TO 15"	18" & OVER
BEDDING BELOW THE PIPE BARREL – 'X'	O.D./8 4" MIN.	O.D./8 4" MIN.	O.D./8 4" MAX.

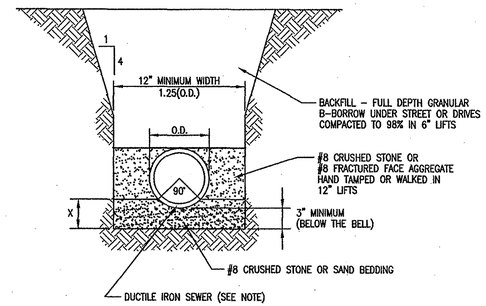

NOTE:

ANY PVC PIPING SHOWN ON PLANS ARE TO BE BACKFILLED WITH GRANULAR MATERIAL TO 12" ABOVE CROWN OF PIPE.

TYPICAL TRENCH AND PIPE BEDDING DETAIL

NOT TO SCALE

GENERAL NOTES:

1. CONTRACTOR TO INSTALL ALL EQUIPMENT IN COMPLETE ACCORDANCE WITH ALL MANUFACTURER'S RECOMMENDATIONS.
2. ALL FASTENERS, SUPPORTS, ETC. TO BE STAINLESS STEEL.
3. REFER TO SPECIFICATIONS FOR FURTHER INFORMATION.
4. ALL CONCRETE TO BE MINIMUM F'c = 4000 PSI. ALL REINFORCING STEEL TO BE MINIMUM Fy = 60,000 PSI.
5. SEE STRUCTURAL DETAIL SHEET AND ELECTRICAL/MECHANICAL SHEETS FOR FURTHER DETAIL.
6. SEE PLANT CONTROL/MONITOR SPECIFICATIONS FOR NECESSARY EQUIPMENT COORDINATION.
7. SEE DETAIL SHEET FOR TYPICAL WALL PENETRATION DETAILS.
8. ALL FERROUS METAL SURFACES TO BE PREPARED AND PAINTED IN ACCORDANCE WITH THE SPECIFICATIONS.
9. SEE DETAIL SHEET FOR GRATING DETAILS.
10. CONTRACTOR TO COORDINATE WITH ALL OTHER APPLICABLE PLAN SHEETS AND SPECIFICATIONS.
11. CONTRACTOR RESPONSIBLE FOR TRANSFERRING ALL SUITABLE TREATMENT MATERIAL FROM EXISTING TANKS TO THE PROPOSED TANKS.
12. CONTRACTOR TO VERIFY EQUIPMENT MOUNTING ELEVATIONS AND DIMENSIONS PRIOR TO CONSTRUCTION.
13. CONTRACTOR IS TO VISIT THE SITE PRIOR TO CONSTRUCTION IN ORDER TO IDENTIFY ANY EXISTING CONFLICTS TO BE ADDRESSED.

DESIGN SET 05-17-13

CONSULTANT:

REVISIONS:

DATE	DESCRIPTION	BY
5/17/13	PROJECT REVISIONS	JRN

APPROVED BY:

JAMES W. FRAZELL REGISTERED No. 17208 STATE OF INDIANA PROFESSIONAL ENGINEER

6/17/13

THIS DRAWING AND THE IDEAS, DESIGNS AND CONCEPTS CONTAINED HEREIN ARE THE EXCLUSIVE INTELLECTUAL PROPERTY OF TRIAD ASSOCIATES, INC., AND ARE NOT TO BE USED OR REPRODUCED, IN WHOLE OR IN PART, WITHOUT THE WRITTEN CONSENT OF TRIAD ASSOCIATES, INC.

TRIAD ASSOCIATES INC.
5835 LAWTON LOOP EAST DRIVE
INDIANAPOLIS, INDIANA 46216
PHONE: 317-377-5230 FAX: 317-377-5241

DESIGNED FOR:

THE TOWN OF SWEETSER
GRANT COUNTY, INDIANA

SHEET TITLE:

LIFT STATION MISCELLANEOUS DETAILS

JOB NUMBER: 2011115D	
SCALE: AS NOTED	CHECKED BY: M.P.H.
PLOT SCALE: 1=32	PLOT DATE: 06/17/13
DRAWN BY: J.R.N.	DATE: MAY, 2013
DESIGNED BY: James W. Frazell, P.E.	
DRAWING NAME: 2011115D-LiftStationmMiscDetailsREV2	

SHEET No.

LS7

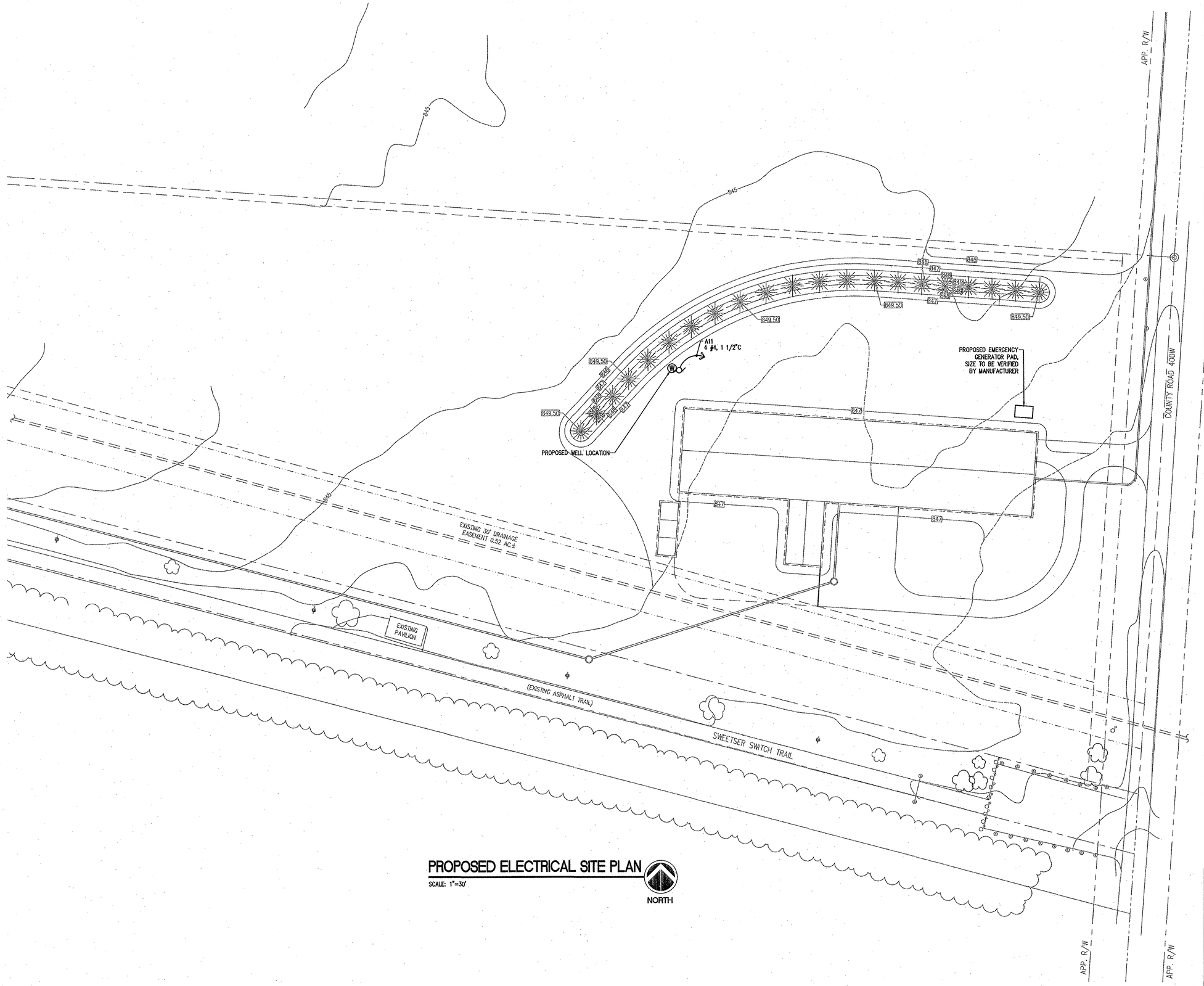

PROPOSED ELECTRICAL SITE PLAN

SCALE: 1"=30'

RE-DESIGN SET 06-17-13

CONSULTANT:

REVISIONS:

DATE	DESCRIPTION	BY
5/17/13	PROJECT REVISIONS	JRN

APPROVED BY:

JAMES W. FRAZELL REGISTERED No. 17208 STATE OF INDIANA PROFESSIONAL ENGINEER

6/17/13

THIS DRAWING AND THE IDEAS, DESIGNS AND CONCEPTS CONTAINED HEREIN ARE THE EXCLUSIVE INTELLECTUAL PROPERTY OF TRIAD ASSOCIATES, INC., AND ARE NOT TO BE USED OR REPRODUCED, IN WHOLE OR IN PART, WITHOUT THE WRITTEN CONSENT OF TRIAD ASSOCIATES, INC.

TRIAD ASSOCIATES INC.
5835 LAWTON LOOP EAST DRIVE
INDIANAPOLIS, INDIANA 46216
PHONE: 317-377-5230 FAX: 317-377-5241

DESIGNED FOR:

THE TOWN OF SWEETSER
GRANT COUNTY, INDIANA

SHEET TITLE:

PROPOSED ELECTRICAL SITE PLAN

JOB NUMBER: 201115D	
SCALE: AS NOTED	CHECKED BY: M.P.H.
PLOT SCALE: 1=30	PLOT DATE: 06/17/13
DRAWN BY: D.A.P.	DATE: MAY, 2013
DESIGNED BY: James W. Frazell, P.E.	
DRAWING NAME: 201115D-PropSiteElecREV2	

SHEET No.

E1

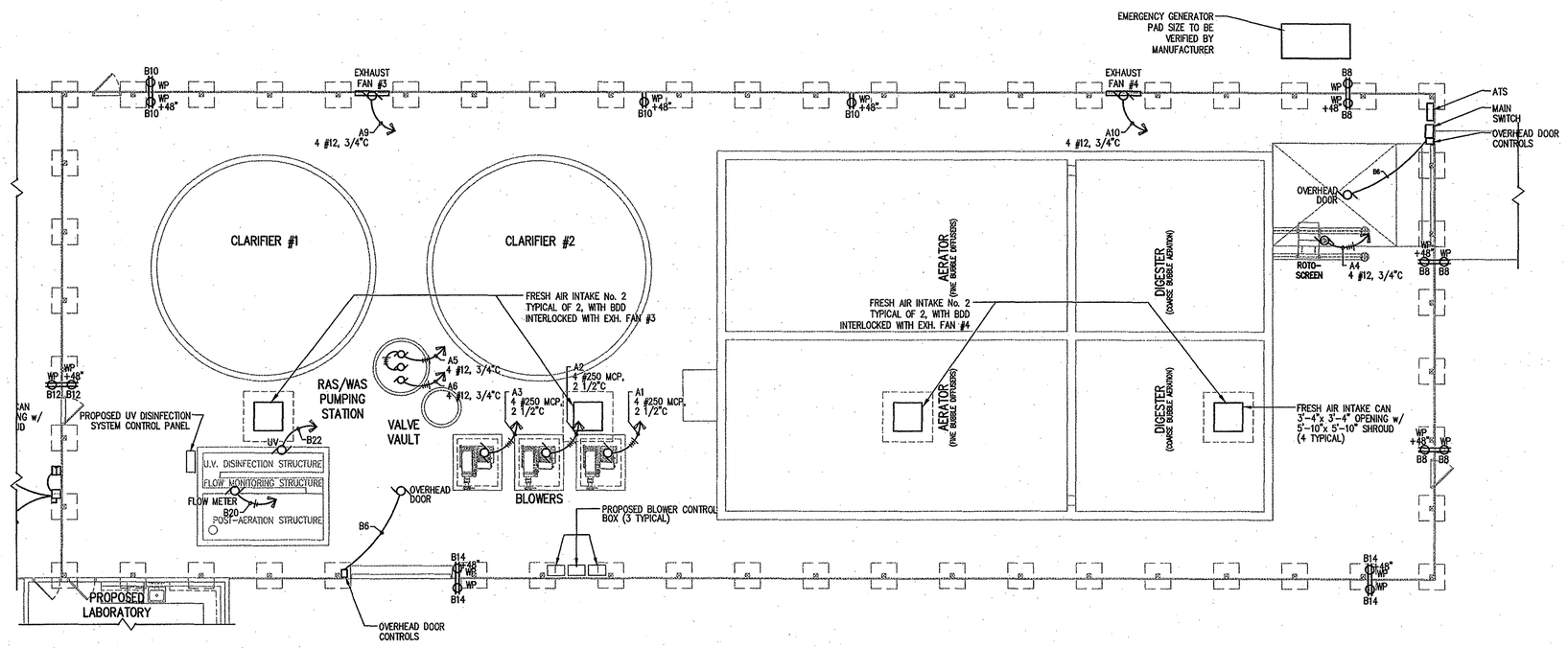

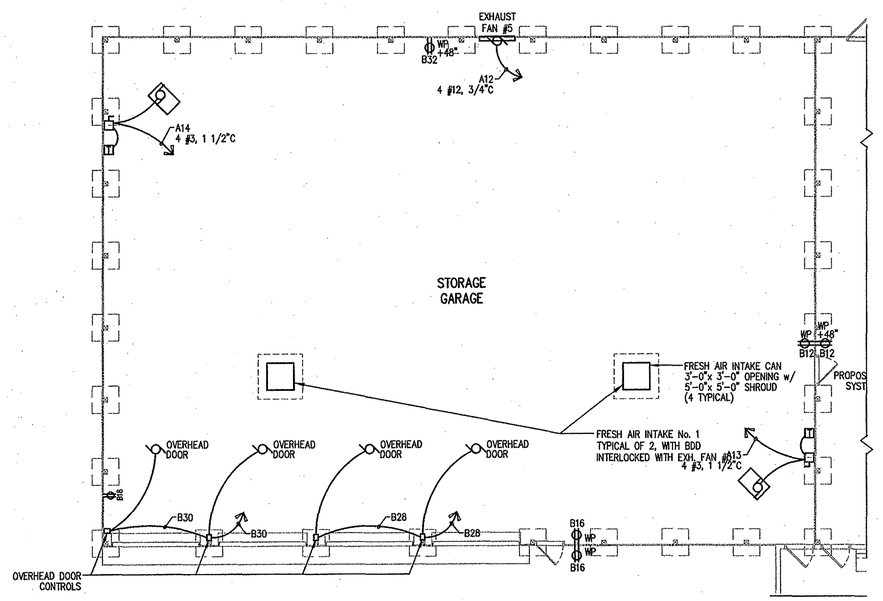

PROPOSED PLANT ELECTRICAL PLAN

SCALE: 1/8" = 1'-0"

NORTH

NOTE:
CONTRACTOR IS TO INSTALL A MINIMUM OF 20% TRANSLUCENT PANELS TO THE PROPOSED ROOF SYSTEM IN BOTH THE PLANT AREA AND THE STORAGE GARAGE AREA.

RE-DESIGN SET 06-17-13

CONSULTANT:

REVISIONS:

DATE	DESCRIPTION	BY
3/17/13	PROJECT REVISIONS	DAP

APPROVED BY:

JAMES W. FRAZELL REGISTERED No. 17208 STATE OF INDIANA PROFESSIONAL ENGINEER 6/17/13

THIS DRAWING AND THE IDEAS, DESIGNS AND CONCEPTS CONTAINED HEREIN ARE THE EXCLUSIVE INTELLECTUAL PROPERTY OF TRIAD ASSOCIATES, INC., AND ARE NOT TO BE USED OR REPRODUCED, IN WHOLE OR IN PART, WITHOUT THE WRITTEN CONSENT OF TRIAD ASSOCIATES, INC.

TRIAD ASSOCIATES INC.
5835 LAWTON LOOP EAST DRIVE
INDIANAPOLIS, INDIANA 46216
PHONE: 317-377-5230 FAX: 317-377-5241

DESIGNED FOR:

THE TOWN OF SWEETSER
GRANT COUNTY, INDIANA

SHEET TITLE:

PROPOSED PLANT AND GARAGE ELECTRICAL PLAN

JOB NUMBER: 201115D	
SCALE: AS NOTED	CHECKED BY: M.P.H.
PLOT SCALE: 1:1	PLOT DATE: 06/17/13
DRAWN BY: JET/DAP	DATE: MAY, 2013
DESIGNED BY: James W. Frazell, P.E.	
DRAWING NAME: 201115D-PropElecLayout1REV2	

SHEET No.

E2

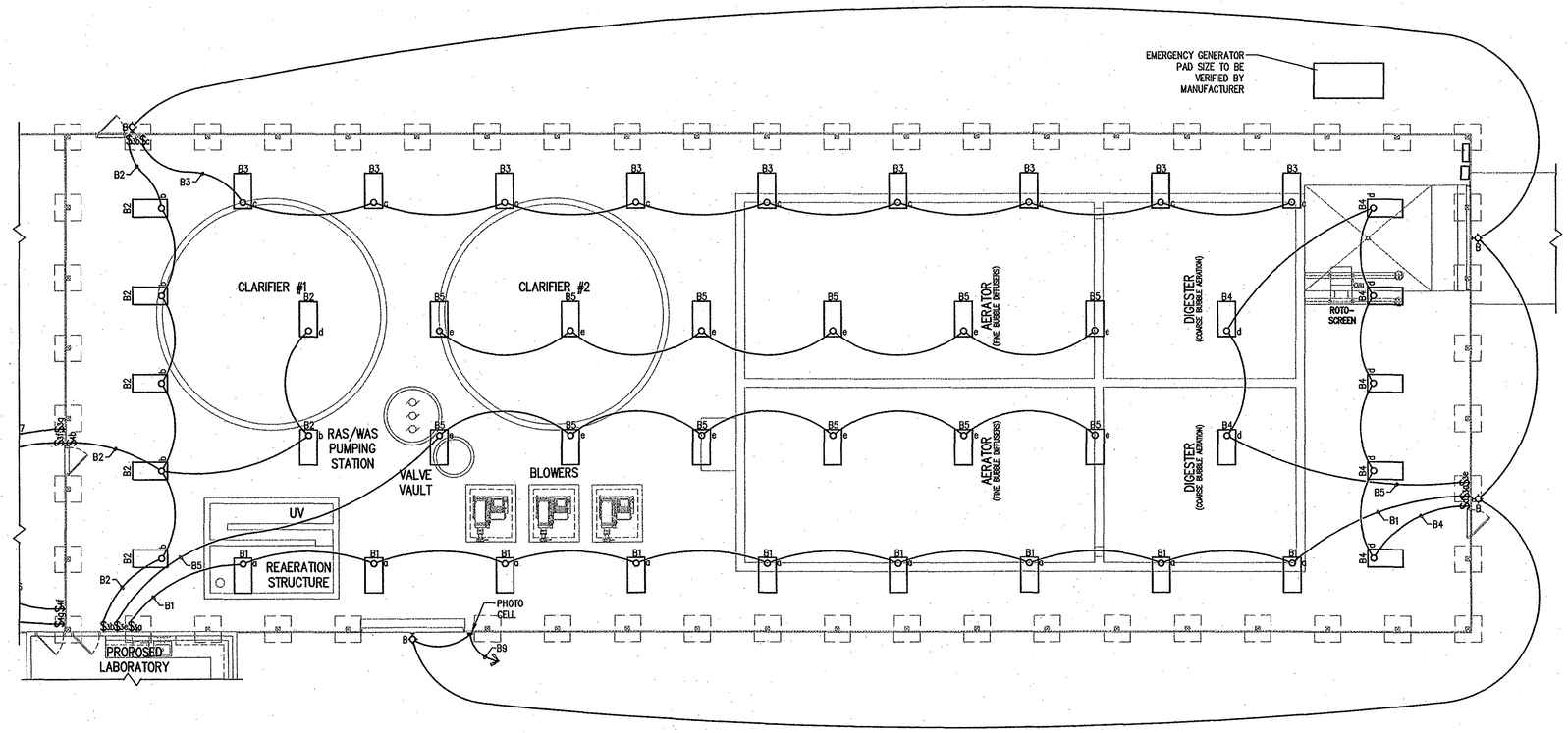

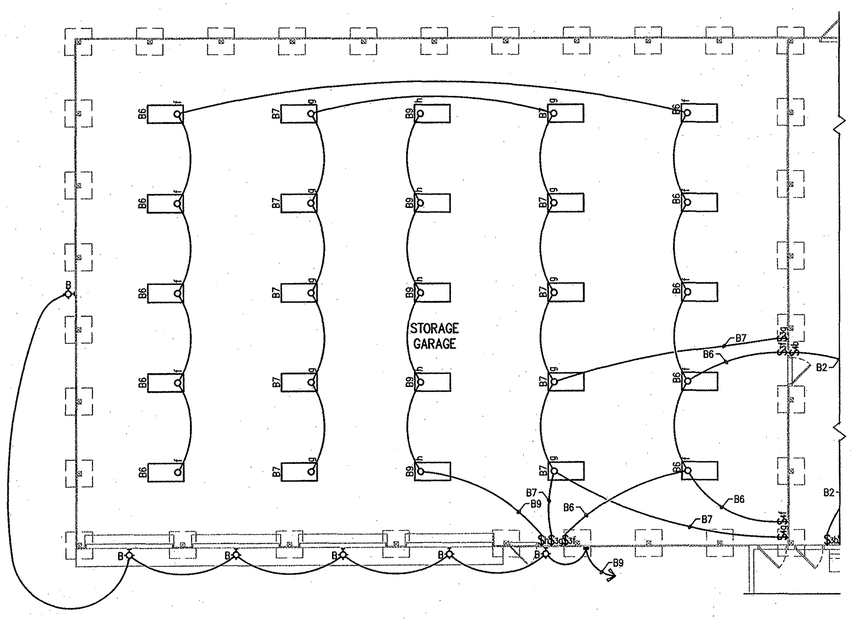

PROPOSED PLANT LIGHTING PLAN

SCALE: 1/8" = 1'-0"

NORTH

NOTE:
CONTRACTOR IS TO INSTALL A MINIMUM OF 20% TRANSLUCENT PANELS TO THE PROPOSED ROOF SYSTEM IN BOTH THE PLANT AREA AND THE STORAGE GARAGE AREA.

RE-DESIGN SET 06-17-13

CONSULTANT:

REVISIONS:

DATE	DESCRIPTION	BY
3/17/13	PROJECT REVISIONS	DAP

APPROVED BY:

JAMES W. FRAZELL REGISTERED No. 17208 STATE OF INDIANA PROFESSIONAL ENGINEER 6/17/13

THIS DRAWING AND THE IDEAS, DESIGNS AND CONCEPTS CONTAINED HEREIN ARE THE EXCLUSIVE INTELLECTUAL PROPERTY OF TRIAD ASSOCIATES, INC., AND ARE NOT TO BE USED OR REPRODUCED, IN WHOLE OR IN PART, WITHOUT THE WRITTEN CONSENT OF TRIAD ASSOCIATES, INC.

TRIAD ASSOCIATES INC.
5835 LAWTON LOOP EAST DRIVE
INDIANAPOLIS, INDIANA 46216
PHONE: 317-377-5230 FAX: 317-377-5241

DESIGNED FOR:

THE TOWN OF SWEETSER
GRANT COUNTY, INDIANA

SHEET TITLE:

PROPOSED PLANT AND GARAGE LIGHTING PLAN

JOB NUMBER: 201115D	
SCALE: AS NOTED	CHECKED BY: M.P.H.
PLOT SCALE: 1:1	PLOT DATE: 06/17/13
DRAWN BY: JET/DAP	DATE: MAY, 2013
DESIGNED BY: James W. Frazell, P.E.	
DRAWING NAME: 201115D-PropElecLayout2REV2	

SHEET No.

E3

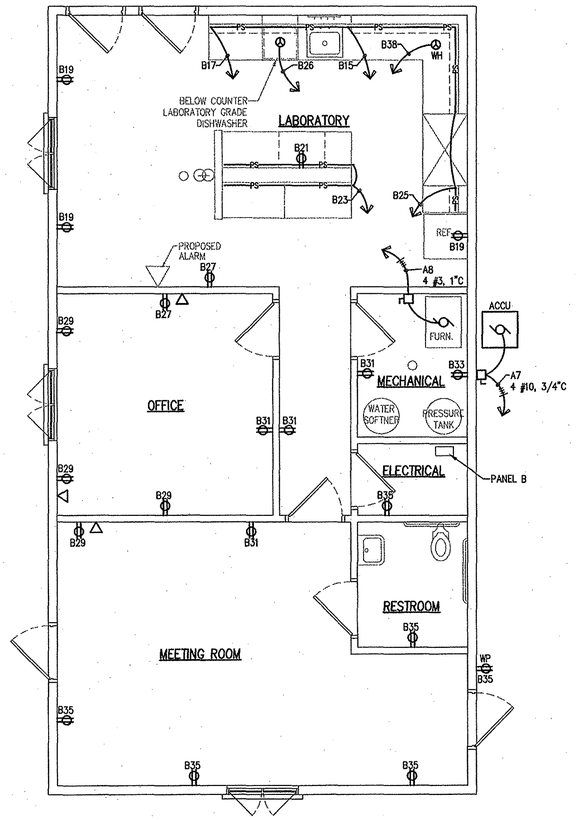

ELECTRICAL FLOOR PLAN

SCALE: 1/4"= 1'-0"

NORTH

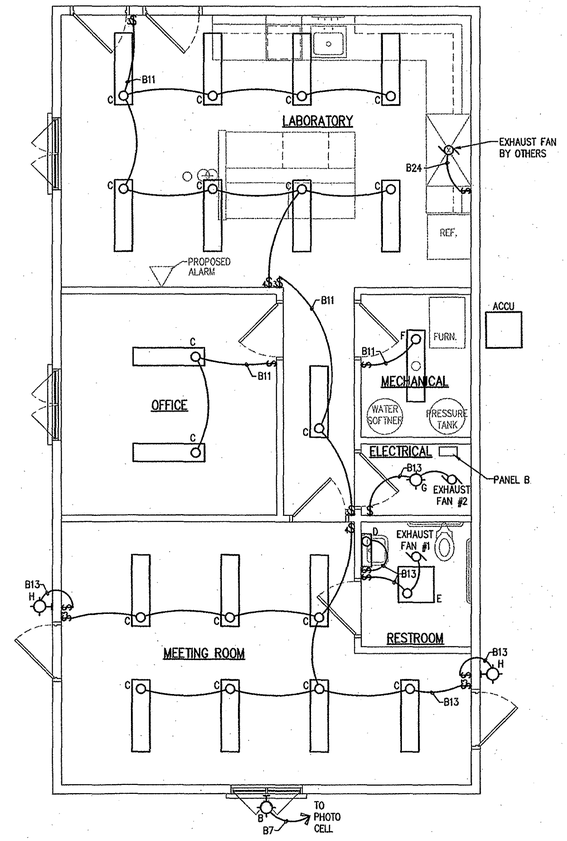

LIGHTING FLOOR PLAN

SCALE: 1/4"= 1'-0"

NORTH

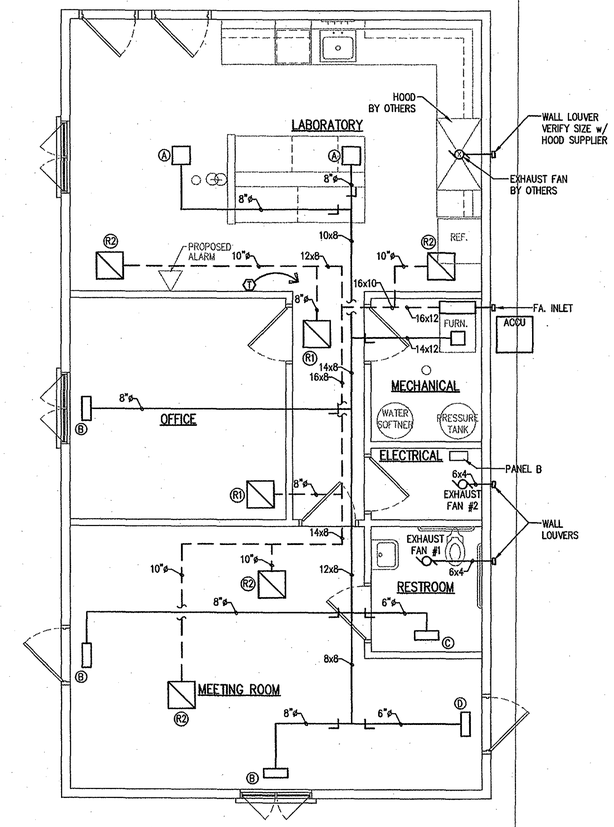

HVAC FLOOR PLAN

SCALE: 1/4"= 1'-0"

NORTH

RE-DESIGN SET 06-17-13

CONSULTANT:

REVISIONS:

DATE	DESCRIPTION	BY
5/17/13	PROJECT REVISIONS	DAP

APPROVED BY:

JAMES W. FRAZELL REGISTERED No. 17208 STATE OF INDIANA PROFESSIONAL ENGINEER

6/17/13

THIS DRAWING AND THE IDEAS, DESIGNS AND CONCEPTS CONTAINED HEREIN ARE THE EXCLUSIVE INTELLECTUAL PROPERTY OF TRIAD ASSOCIATES, INC., AND ARE NOT TO BE USED OR REPRODUCED, IN WHOLE OR IN PART, WITHOUT THE WRITTEN CONSENT OF TRIAD ASSOCIATES, INC.

TRIAD ASSOCIATES INC.
5835 LAWTON LOOP EAST DRIVE
INDIANAPOLIS, INDIANA 46216
PHONE: 317-377-5230 FAX: 317-377-5241

DESIGNED FOR:

THE TOWN OF SWEETSER
GRANT COUNTY, INDIANA

SHEET TITLE:

PROPOSED LABORATORY ELECTRICAL PLANS

JOB NUMBER: 201115D	
SCALE: AS NOTED	CHECKED BY: M.P.H.
PLOT SCALE: 1=48	PLOT DATE: 06/17/13
DRAWN BY: D.A.P.	DATE: MAY, 2013
DESIGNED BY: James W. Frazell, P.E.	
DRAWING NAME: 201115D-LabElec01REV2	

SHEET No.

E4

LIGHTING FIXTURE SCHEDULE

Type	DESCRIPTION	Lamp Data	Volt.	Manufactures Catalog Number	Notes
A	Pendant enclosed	4 - T8 32W	120	Columbia # LHV 4 4 32 GW ST EP 120	
B	Exterior Bracket	50W PSMH	120	Hubble NRG -315	
C	1 x 4 Surface Mount	2 - T8 32 W	120	Columbia # WCW 4 3 32 3E 120	
D	Over Mirror Light	2 - 18 T8	120	Columbia # W2 - 218 EPU	
E	Surface Square	2 - 17 T8	120	Columbia # WC 2 217 EPU	
F	Strip 2 Light	2 - T8 32 W	120	Columbia CSR - 4 2 32 ST EPU	
G	Utility Surface Mtd	2 - 42W CFL	120	Hubble R12 - 84F	
H	Exterior Bracket	50W PSMH	120	Hubble NRG -315	With Photocell Control

HVAC EQUIPMENT SCHEDULE

Unit No.	Heat KW	COOLING (Nominal)	REQ. MIN CFM CLG.	FURNACE UNIT NO.	FURNACE-208/3ph MIN.CKT AMPS	AIR COOLED CONDENSER NO.	CONDENSOR-240v MIN.CKT AMPS	EVAPORATOR COIL
Furn. #1	10	30,000	1000	TXC035A	35	2TTB30	21.0	TXC Series
Unit Heaters	30				100			

NOTES:

1. EQUIPMENT NUMBERS ARE TRANE, EQUALS BY: BRYANT OR CARRIER OR OTHER PRIOR APPROVED MANUFACTURER ARE ACCEPTABLE.
2. ELECTRIC UNIT HEATERS ARE TO BE 30KW, 208V, 3 PHASE, DAYTON #2YU77, 102,000/77,000 BTU/HR. 72.3/63 FLA.

EXHAUST FAN SCHEDULE

FAN #	ROOMS	CFM	SP	MODEL NO.	HP	NOTES
1	RR	230	0.25	Penn # Z8S	1.8 Amps	
2	Mech.	196	0.125	Penn # Z6S	1.7amps	
3	WH	16500	0.125	Penn # BFM - 42	2	2 Speed
4	WH	16500	0.125	Penn # BFM - 42	2	2 Speed
5	Garage	12000	0.125	Penn # BFM - 42	1 1/2	2 Speed

Roof Mounted Fresh Air Intakes

FAN #	ROOMS	CFM	SP	MODEL NO.	NOTES
1	Garage	6000	0.125	Penn # FAI - 24B	
2	Equip. Room	8000	0.125	Penn # FAI - 30	

NOTE:
PROVIDE B.D.D. FOR ALL INTAKES, INTERLOCK WITH EXHAUST FAN DESIGNATED ON PLANS

DIFFUSERS

MARK	CFM	FACE	NECK	BLOW	MFG. CATALOG SERIES
A	200	12 X 12	8"	4 Way	TITUS Series TMS
B	150	9 X 15	8"	3 Way	TITUS Series TDC
C	50	6 X 12	6"	3 Way	TITUS Series TDC
D	100	9 X 12	6"	3 Way	TITUS Series TDC

GRILLES & REGISTERS

MARK	SIZE	LOCATION	MFG. CATALOG NUMBER
R1	12 X 12	Ceiling	TITUS Series 50
R2	15 X 15	Ceiling	TITUS Series 50

NOTE:
ALL SUPPLY DIFFUSERS SHALL HAVE AC-35 OR EQUAL VOLUME DAMPERS INCLUDED.

PANEL DESIGNATION: Panel A — PROJECT. Sweetser Waste Water Plant
VOLTAGE:120/208 Volt 3 Phase — MAIN AMPACITY: 800 Amp MLO. 208 Volt / 3 Phase
BRANCH CIRCUITS: Breakers

CKT	DESCRIPTION	WATTS	TRIP		CKT	DESCRIPTION	WATTS	TRIP
1	60 HP Blower	55,440	3P - 250	A	2	60 HP Blower	55,440	3P - 250
				B				
				C				
3	60 HP Blower	55,440	3P - 250	A	4	Screen 3/4 HP	1,500	3P - 20
				B				
				C				
5	2 (RAS/WAS) Pumps	3,000	3P - 20	A	6	RAS/WAS Pump	1,500	3P - 20
				B				
				C				
7	ACCU	8,750	3P - 30	A	8	Furnace (Elect. Heat)	12,000	3P - 90
				B				
				C				
9	Wall Exhaust Fan	2,000	3P - 20	A	10	Wall Exhaust Fan	2,000	3P - 20
				B				
				C				
11	Well Pump	7,500	3P - 30	A	12	Wall Exhaust Fan	2,000	3P - 20
				B				
				C				
13	Garage Heater	30,000	3P - 100	A	14	Garage Heater	30,000	3P - 100
				B				
				C				
	TOTALS	162,130					104,440	

PANEL DESIGNATION: Panel B — PROJECT. Sweetser Waste Water Plant
VOLTAGE:120/208 Volt 3 Phase — MAIN AMPACITY: 200 Amp MLO. 208 Volt / 3 Phase
BRANCH CIRCUITS: Breakers

CKT	DESCRIPTION	WATTS	TRIP		CKT	DESCRIPTION	WATTS	TRIP
1	Lighting	1,420	1P - 20	A	2	Lighting	1,050	1P - 20
3	Lighting	1,350	1P - 20	B	4	Lighting	1,050	1P - 20
5	Lighting	1,200	1P - 20	C	6	Lighting	1,540	1P - 20
7	Lighting	1,200	1P - 20	A	8	Duplex Conv Outlets	1,000	1P - 20
9	Lighting	1,120	1P - 20	B	10	Duplex Conv Outlets	1,000	1P - 20
11	Lighting	1,200	1P - 20	C	12	Duplex Conv Outlets	1,000	1P - 20
13	Lighting	1,300	1P - 20	A	14	Duplex Conv Outlets	1,000	1P - 20
15	Plug Strip	1,000	1P - 20	B	16	Duplex Conv Outlets	1,000	1P - 20
17	Plug Strip	1,000	1P - 20	C	18	Duplex Conv Outlets	1,000	1P - 20
19	Duplex Conv Outlets	1,000	1P - 20	A	20	Flow Meter	1,000	1P - 20
21	Plug Strip	1,000	1P - 20	B	22	U.V.	1,500	1P - 20
23	Plug Strip	1,000	1P - 20	C	24	Hood by others	750	1P - 20
25	Plug Strip	1,000	1P - 20	A	26	Dishwasher	1,500	1P - 20
27	Duplex Conv Outlets	1,000	1P - 20	B	28	O. H. Doors	1,200	1P - 20
29	Duplex Conv Outlets	1,000	1P - 20	C	30	O. H. Doors	1,200	1P - 20
31	Duplex Conv Outlets	1,000	1P - 20	A	32	Duplex Conv & EX. Fan	1,500	1P - 20
33	Duplex Conv Outlets	1,000	1P - 20	B	34	Spare		1P - 20
35	Duplex Conv Outlets	1,000	1P - 20	C	36	Spare		1P - 20
37	Spare		1P - 20	A	38	Water Heater	2,500	2P - 20
39	Spare		1P - 20	B				
41	Spare		1P - 20	C	40	Spare		1P - 20
	TOTALS	19,790					20,790	

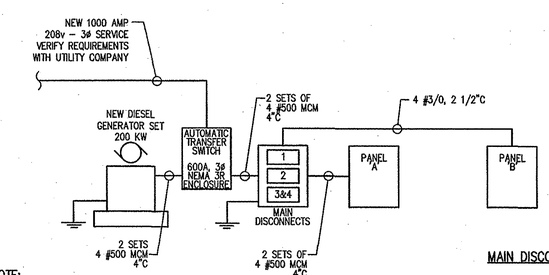

NOTE:
SEE SPECIFICATIONS FOR EMERGENCY GENERATOR DETAILS

MAIN DISCONNECTS:

#1 – 3P–800A, PANEL 'A'
#2 – 3P–200A, PANEL 'B'
#3 – 3P–100A, SPACE
#4 – 3P–100A, SPACE

PROPOSED ELECTRICAL RISER DIAGRAM

SCALE: N.T.S.

RE-DESIGN SET 06-17-13

CONSULTANT:

REVISIONS:

DATE	DESCRIPTION	BY
5/17/13	PROJECT REVISIONS	DAP

APPROVED BY:

JAMES W. FRAZELL REGISTERED No. 17208 STATE OF INDIANA PROFESSIONAL ENGINEER 6/17/13

THIS DRAWING AND THE IDEAS, DESIGNS AND CONCEPTS CONTAINED HEREIN ARE THE EXCLUSIVE INTELLECTUAL PROPERTY OF TRIAD ASSOCIATES, INC., AND ARE NOT TO BE USED OR REPRODUCED, IN WHOLE OR IN PART, WITHOUT THE WRITTEN CONSENT OF TRIAD ASSOCIATES, INC.

TRIAD ASSOCIATES INC.
5835 LAWTON LOOP EAST DRIVE
INDIANAPOLIS, INDIANA 46216
PHONE: 317-377-5230 FAX: 317-377-5241

DESIGNED FOR:

THE TOWN OF SWEETSER
GRANT COUNTY, INDIANA

SHEET TITLE:

PROPOSED ELECTRICAL RISER DIAGRAM AND PROPOSED ELECTRICAL SCHEDULES

JOB NUMBER: 201115D	
SCALE: AS NOTED	CHECKED BY: M.P.H.
PLOT SCALE: 1=1	PLOT DATE: 06/17/13
DRAWN BY: D.A.P.	DATE: MAY, 2013
DESIGNED BY: James W. Frazell, P.E.	
DRAWING NAME: 201115D-ElecDet01REV2	

SHEET No.

E5

ATTACHMENT NO. 13

CE SOLUTIONS ROOF REPORT

CE Solutions
structural engineers

January 30, 2026

Mr. Ricardo Paredes
Project Manager – Water/Wastewater
DCCM
8770 North Street
Suite 110
Fishers, IN 46038

Re: Solar Field – Feasibility Study
Structural Engineering Services
Wastewater Treatment Plant Improvements Project
Sweetser, Indiana

CE Solutions Project No: 25-197

Dear Ricardo:

We have completed a structural feasibility study of the existing roof framing at the Wastewater Treatment Plant in Sweetser, Indiana. The study has been performed at RQAW's request as part of the above-referenced project led by RQAW to study if structural modifications/improvements are needed for the existing roof structural system to support the desired rooftop solar field. The following is a summary of our analysis and recommendations.

EXISTING CONDITIONS

The existing roof structure consists of prefabricated wood trusses with metal plate connections spaced at 4'-0" on center and spanning 54' 6". The wooden trusses are constructed with 2x6 members for the top and bottom chords and 2x4 members for the webs. Bracing the tops of the trusses are 2x4 purlins spaced at 2'- 0" on center. On top of the purlins is ½" plywood sheathing with metal roof panels above. The trusses are supported at each end by two 2x12 header beams spanning 8'-0" in between 6x6 wood posts.

ANALYSIS/EVALUATION

ROOF TRUSSES

The truss geometry was measured on site, and the existing loading and geometry was modeled in Bentley's RAM Elements software. The roof trusses' capacity was analyzed with the addition of a 5 pounds per square foot (psf) solar panel load on the roof above them along with existing rooftop dead and live loads. Analysis showed the roof trusses directly under solar panels will need additional reinforcement to safely support the new loading conditions.

HEADER BEAMS

The header beams supporting the roof trusses were analyzed to account for the additional loading due to the solar panels. Analysis showed each header beam supporting a truss with additional solar panel roof loading will need to be reinforced as well.

CE Solutions, Inc.
8770 North Street
Suite 100
Fishers, IN 46038
317.818.1912

cesolutionsinc.com

PLYWOOD SHEATHING

The existing plywood that spans the wood trusses and supports the metal roof deck above appears to have extensive mold damage affecting it. The mold is demonstrative of moisture conditions in the field that reduce the structural integrity of the sheathing.

DROPPED CEILING

For the case of a dropped ceiling being added underneath the improved trusses, a dead load was applied to the bottom chord of the trusses in analysis. If this potential option is selected, the truss will require additional reinforcement to safely support the new load.

RECOMMENDATIONS

The following recommendations are proposed for reinforcing the existing roof structure.

ROOF TRUSSES

To reinforce the existing roof trusses, CE Solutions recommends mirroring/duplicating the existing members and connecting these new members to the existing truss. This entails attaching 2x6 members along the length of the top chord members and the bottom chord members and attaching 2x4 members along the lengths of the interior webs. At the intersections of web and chord members, there will be plywood gusset plates on the outsides of both trusses with nails joining the new and existing members.

HEADER BEAMS

To reinforce the existing header beams, CE Solutions recommends adding two new 2x12 members to the existing boards. The new boards will be connected to the posts with supplemental nailing.

PLYWOOD SHEATHING

It is recommended that the existing plywood sheathing is removed and replaced with new plywood sheathing. CE Solutions also recommends applying a protective coating to protect the wood from future mold/water damage that could happen from the climate conditions.

DROPPED CEILING

If the option for a dropped ceiling is pursued, in addition to the reinforcement required to improve trusses for solar panel additions as outlined above, some web members will require a larger size member to support the ceiling attached below it.

OPINION OF PROBABLE CONSTRUCTION COST

CE Solutions anticipates the structural improvements to cost an estimated $7/sf of improvements. The cost impact of different options of percentage of roof to be covered by solar panels is shown below:

25% Coverage	$15,500
50% Coverage	$31,000
100% Coverage	$62,000

CONCLUDING REMARKS

Please note that our structural feasibility study was limited strictly to those items identified in this summary and to the extent noted. Should you have any questions or wish to discuss our structural analysis further, please do not hesitate to contact the undersigned. Thank you again for choosing CE Solutions for your structural engineering needs on this very important project.

Very truly yours,

Josh Stone, EI
Project Manager

ATTACHMENT NO. 14

UPDATED 00 21 13 INSTRUCTIONS TO BIDDERS

INSTRUCTIONS TO BIDDERS

TABLE OF CONTENTS

Page

ARTICLE 1 – Defined Terms 2

ARTICLE 2 – Copies of Bidding Documents 2

ARTICLE 3 – Qualifications of Bidders 2

ARTICLE 4 – Site and Other Areas; Existing Site Conditions; Examination of Site; Owner's Safety Program; Other Work at the Site 3

ARTICLE 5 – Bidder's Representations 4

ARTICLE 6 – Pre-Bid Conference 5

ARTICLE 7 – Interpretations and Addenda 5

ARTICLE 8 – Bid Security 5

ARTICLE 9 – Contract Times 6

ARTICLE 10 – Liquidated Damages 6

ARTICLE 11 – Substitute and "Or-Equal" Items 6

ARTICLE 12 – Subcontactors, Suppliers and Others 6

ARTICLE 13 – Preparation of Bid 7

ARTICLE 14 – Submittal of Bid 8

ARTICLE 15 – Modification and Withdrawal of Bid 8

ARTICLE 16 – Opening of Bids 8

ARTICLE 17 – Bids to Remain Subject to Acceptance 8

ARTICLE 18 – Evaluation of Bids and Award of Contract 8

ARTICLE 19 – Bonds and Insurance 9

ARTICLE 20 – Signing of Agreement 9

ARTICLE 21 – Sales and Use Taxes 9

ARTICLE 22 – SRF Loan requirements 10

ARTICLE 23 – OCRA Requirements 10

ARTICLE 1 – DEFINED TERMS

1.01 Terms used in these Instructions to Bidders have the meanings indicated in the General Conditions and Supplementary Conditions. Additional terms used in these Instructions to Bidders have the meanings indicated below:

A. *Issuing Office* – The office from which the Bidding Documents are to be issued. The Issuing Office is as stated in Section 00 11 13 - Advertisement for Bids.

ARTICLE 2 – COPIES OF BIDDING DOCUMENTS

2.01 Complete sets of the Bidding Documents may be obtained from the Issuing Office in the number and format stated in the advertisement to bid.

2.02 Complete sets of Bidding Documents shall be used in preparing Bids; neither Owner nor Engineer assumes any responsibility for errors or misinterpretations resulting from the use of incomplete sets of Bidding Documents.

2.03 Owner and Engineer, in making copies of Bidding Documents available on the above terms, do so only for the purpose of obtaining Bids for the Work and do not authorize or confer a license for any other use.

ARTICLE 3 – QUALIFICATIONS OF BIDDERS

3.01 To demonstrate Bidder's qualifications to perform the Work, Bidder shall submit with its Bid (a) written evidence establishing its qualifications such as financial data, previous experience, and present commitments, and (b) the following additional information:

A. Evidence of Bidder's authority to do business in the state where the Project is located.

B. Bidder's state or other contractor license number, if applicable.

C. Subcontractor and Supplier qualification information; coordinate with provisions of Article 12 of these Instructions, "Subcontractors, Suppliers, and Others."

D. Contractor's Bid for Public Work - Form 96

E. SRF Documents due at time of Bid

1. Form OEE-1
2. Form OEE-2
3. Green Project Reserve Bid Breakdown Form

F. SRF Documents due 48 hours after Bid Opening

1. Form 6100-3
2. Form 6100-4
3. Bidder's List Form
4. Good Faith Efforts Worksheet

3.02 A Bidder's failure to submit required qualification information within the times indicated may disqualify Bidder from receiving an award of the Contract. No requirement in this Article 3 to submit information will prejudice the right of Owner to seek additional pertinent information regarding Bidder's qualifications.

3.03 Bidder is advised to carefully review those portions of the Bid Form requiring Bidder's representations and certifications.

ARTICLE 4 – SITE AND OTHER AREAS; EXISTING SITE CONDITIONS; EXAMINATION OF SITE; OWNER'S SAFETY PROGRAM; OTHER WORK AT THE SITE

4.01 *Site and Other Areas*

A. The Site is identified in the Bidding Documents. By definition, the Site includes rights-of-way, easements, and other lands furnished by Owner for the use of the Contractor. Any additional lands required for temporary construction facilities, construction equipment, or storage of materials and equipment, and any access needed for such additional lands, are to be obtained and paid for by Contractor.

4.02 *Existing Site Conditions*

A. Subsurface and Physical Conditions;

1. In the preparation of the Contract Documents, Engineer relied upon the following reports of explorations and tests of subsurface conditions at the Site of the Work.

a. NOT APPLICABLE

2. No reports or drawings relating to Hazardous Environmental Conditions have been identified at or adjacent to the Site.

B. Underground Facilities: Information and data shown or indicated in the Bidding Documents with respect to existing Underground Facilities at or contiguous to the Site are set forth in the Contract Documents and are based upon information and data furnished to Owner and Engineer by owners of such Underground Facilities, including Owner, or others.

C. Adequacy of Data: Provisions concerning responsibilities for the adequacy of data furnished to prospective Bidders with respect to subsurface conditions, other physical conditions, and Underground Facilities, and possible changes in the Bidding Documents due to differing or unanticipated subsurface or physical conditions appear in Paragraphs 5.03, 5.04, and 5.05 of the General Conditions. Provisions concerning responsibilities for the adequacy of data furnished to prospective Bidders with respect to a Hazardous Environmental Condition at the Site, if any, and possible changes in the Contract Documents due to any Hazardous Environmental Condition uncovered or revealed at the Site which was not shown or indicated in the Drawings or Specifications or identified in the Contract Documents to be within the scope of the Work, appear in Paragraph 5.06 of the General Conditions.

4.03 *Site Visit and Testing by Bidders*

A. Bidder shall conduct the required Site visit during normal working hours and shall not disturb any ongoing operations at the Site. Bidders must advise Patrick Kendall at 765-667-6136 of the date and time they desire to conduct their Site visit.

B. Bidder is not required to conduct any subsurface testing, or exhaustive investigations of Site conditions.

C. On request, and to the extent Owner has control over the Site, and schedule permitting, the Owner will provide Bidder access to the Site to conduct such additional examinations, investigations, explorations, tests, and studies as Bidder deems necessary for preparing and submitting a successful Bid. Owner will not have any obligation to grant such access if doing so is not practical because of existing operations, security or safety concerns, or restraints on Owner's authority regarding the Site.

D. Bidder shall comply with all applicable Laws and Regulations regarding excavation and location of utilities, obtain all permits, and comply with all terms and conditions established by Owner or by property owners or other entities controlling the Site with respect to schedule, access, existing operations, security, liability insurance, and applicable safety programs.

E. Bidder shall fill all holes and clean up and restore the Site to its former condition upon completion of such explorations, investigations, tests, and studies.

4.04 *Owner's Safety Program*

A. Site visits and work at the Site may be governed by an Owner safety program. As the General Conditions indicate, if an Owner safety program exists, it will be noted in the Supplementary Conditions.

4.05 *Other Work at the Site*

A. Reference is made to Article 8 of the Supplementary Conditions for the identification of the general nature of other work of which Owner is aware (if any) that is to be performed at the Site by Owner or others (such as utilities and other prime contractors) and relates to the Work contemplated by these Bidding Documents. If Owner is party to a written contract for such other work, then on request, Owner will provide to each Bidder access to examine such contracts (other than portions thereof related to price and other confidential matters), if any.

ARTICLE 5 – BIDDER'S REPRESENTATIONS

5.01 It is the responsibility of each Bidder before submitting a Bid to:

A. examine and carefully study the Bidding Documents, and any data and reference items identified in the Bidding Documents;

B. visit the Site, conduct a thorough, alert visual examination of the Site and adjacent areas, and become familiar with and satisfy itself as to the general, local, and Site conditions that may affect cost, progress, and performance of the Work;

C. become familiar with and satisfy itself as to all Laws and Regulations that may affect cost, progress, and performance of the Work; carefully study all: (1) reports of explorations and tests of subsurface conditions at or adjacent to the Site and all drawings of physical conditions relating to existing surface or subsurface structures at the Site that have been identified in the Supplementary Conditions, especially with respect to Technical Data in such reports and drawings, and (2) reports and drawings relating to Hazardous Environmental Conditions, if any, at or adjacent to the Site that have been identified in the Supplementary Conditions, especially with respect to Technical Data in such reports and drawings;

D. consider the information known to Bidder itself; information commonly known to contractors doing business in the locality of the Site; information and observations obtained from visits to the Site; the Bidding Documents; and the Site-related reports and drawings identified in the Bidding Documents, with respect to the effect of such information, observations, and documents on (1) the cost, progress, and performance of the Work; (2) the means, methods, techniques, sequences, and procedures of construction to be employed by Bidder; and (3) Bidder's safety precautions and programs;

E. agree, based on the information and observations referred to in the preceding paragraph, that at the time of submitting its Bid no further examinations, investigations, explorations, tests, studies, or data are necessary for the determination of its Bid for performance of the

Work at the price bid and within the times required, and in accordance with the other terms and conditions of the Bidding Documents;

F. become aware of the general nature of the work to be performed by Owner and others at the Site that relates to the Work as indicated in the Bidding Documents;

G. promptly give Engineer written notice of all conflicts, errors, ambiguities, or discrepancies that Bidder discovers in the Bidding Documents and confirm that the written resolution thereof by Engineer is acceptable to Bidder;

H. determine that the Bidding Documents are generally sufficient to indicate and convey understanding of all terms and conditions for the performance and furnishing of the Work; and

I. agree that the submission of a Bid will constitute an incontrovertible representation by Bidder that Bidder has complied with every requirement of this Article, that without exception the Bid and all prices in the Bid are premised upon performing and furnishing the Work required by the Bidding Documents.

ARTICLE 6 – PRE-BID CONFERENCE

6.01 A Pre-Bid conference will be held at the time and location stated in the advertisement to bid. Representatives of Owner and Engineer will be present to discuss the Project. It is not mandatory for prospective Bidders to attend and participate in the conference. Engineer will transmit to all planholders of record such Addenda as Engineer considers necessary in response to questions arising at the conference. Oral statements may not be relied upon and will not be binding or legally effective.

ARTICLE 7 – INTERPRETATIONS AND ADDENDA

7.01 All questions about the meaning or intent of the Bidding Documents are to be submitted to Engineer in writing. Interpretations or clarifications considered necessary by Engineer in response to such questions will be issued by Addenda delivered to all parties recorded as having received the Bidding Documents. Questions received less than seven days prior to the date for opening of Bids may not be answered. Only questions answered by Addenda will be binding. Oral and other interpretations or clarifications will be without legal effect.

7.02 Addenda may be issued to clarify, correct, supplement, or change the Bidding Documents.

ARTICLE 8 – BID SECURITY

8.01 A Bid must be accompanied by Bid security made payable to Owner in an amount of 5 percent of Bidder's maximum Bid price and in the form of a certified check, bank money order, or a Bid bond (on the form included in the Bidding Documents) issued by a surety meeting the requirements of Paragraphs 6.01 and 6.02 of the General Conditions.

8.02 The Bid security of the apparent Successful Bidder will be retained until Owner awards the contract to such Bidder, and such Bidder has executed the Contract Documents, furnished the required contract security, and met the other conditions of the Notice of Award, whereupon the Bid security will be released. If the Successful Bidder fails to execute and deliver the Contract Documents and furnish the required contract security within 15 days after the Notice of Award, Owner may consider Bidder to be in default, annul the Notice of Award, and the Bid security of that Bidder will be forfeited. Such forfeiture shall be Owner's exclusive remedy if Bidder defaults.

8.03 The Bid security of other Bidders that Owner believes to have a reasonable chance of receiving the award may be retained by Owner until the earlier of seven days after the Effective Date of the Contract or 90 days after the Bid opening, whereupon Bid security furnished by such Bidders will be released.

8.04 Bid security of other Bidders that Owner believes do not have a reasonable chance of receiving the award will be released within seven days after the Bid opening.

ARTICLE 9 – CONTRACT TIMES

9.01 The number of days within which, or the dates by which, the Work is to be substantially completed and ready for final payment are set forth in the Agreement.

ARTICLE 10 – LIQUIDATED DAMAGES

10.01 Provisions for liquidated damages, if any, for failure to timely attain Substantial Completion, or completion of the Work in readiness for final payment, are set forth in the Agreement.

ARTICLE 11 – SUBSTITUTE AND "OR-EQUAL" ITEMS

11.01 The Contract for the Work, as awarded, will be on the basis of materials and equipment specified or described in the Bidding Documents without consideration during the bidding and Contract award process of possible substitute or "or-equal" items. In cases in which the Contract allows the Contractor to request that Engineer authorize the use of a substitute or "or-equal" item of material or equipment, application for such acceptance may not be made to and will not be considered by Engineer until after the Effective Date of the Contract.

11.02 All prices that Bidder sets forth in its Bid shall be based on the presumption that the Contractor will furnish the materials and equipment specified or described in the Bidding Documents, as supplemented by Addenda. Any assumptions regarding the possibility of post-Bid approvals of "or-equal" or substitution requests are made at Bidder's sole risk.

ARTICLE 12 – SUBCONTACTORS, SUPPLIERS AND OTHERS

12.01 A Bidder shall be prepared to retain specific Subcontractors, Suppliers, or other individuals or entities for the performance of the Work if required by the Bidding Documents (most commonly in the Specifications) to do so. If a prospective Bidder objects to retaining any such Subcontractor, Supplier, or other individual or entity, and the concern is not relieved by an Addendum, then the prospective Bidder should refrain from submitting a Bid.

12.02 Subsequent to the submittal of the Bid, Owner may not require the Successful Bidder or Contractor to retain any Subcontractor, Supplier, or other individual or entity against which Contractor has reasonable objection.

12.03 The apparent Successful Bidder, and any other Bidder so requested, shall within five days after Bid opening, submit to Owner a list of the Subcontractors or Suppliers proposed for any work.

Such list shall be accompanied by an experience statement with pertinent information regarding similar projects and other evidence of qualification for each such Subcontractor, Supplier, or other individual or entity. If Owner or Engineer, after due investigation, has reasonable objection to any proposed Subcontractor, Supplier, individual, or entity, Owner may, before the Notice of Award is given, request apparent Successful Bidder to submit an acceptable substitute, in which case apparent Successful Bidder shall submit a substitute, Bidder's Bid price will be increased (or

decreased) by the difference in cost occasioned by such substitution, and Owner may consider such price adjustment in evaluating Bids and making the Contract award.

12.04 If apparent Successful Bidder declines to make any such substitution, Owner may award the Contract to the next lowest Bidder that proposes to use acceptable Subcontractors, Suppliers, or other individuals or entities. Declining to make requested substitutions will constitute grounds for forfeiture of the Bid security of any Bidder. Any Subcontractor, Supplier, individual, or entity so listed and against which Owner or Engineer makes no written objection prior to the giving of the Notice of Award will be deemed acceptable to Owner and Engineer subject to subsequent revocation of such acceptance as provided in Paragraph 7.06 of the General Conditions.

ARTICLE 13 – PREPARATION OF BID

13.01 The Bid Form is included with the Bidding Documents.

A. All blanks on the Bid Form shall be completed in ink and the Bid Form signed in ink. Erasures or alterations shall be initialed in ink by the person signing the Bid Form. A Bid price shall be indicated for each section, Bid item, alternate, adjustment unit price item, and unit price item listed therein.

B. If the Bid Form expressly indicates that submitting pricing on a specific alternate item is optional, and Bidder elects to not furnish pricing for such optional alternate item, then Bidder may enter the words “No Bid” or “Not Applicable.”

13.02 A Bid by a corporation shall be executed in the corporate name by a corporate officer (whose title must appear under the signature), accompanied by evidence of authority to sign. The corporate seal must be affixed and attested by the secretary or an assistant secretary. The corporate address and state of incorporation shall be shown.

13.03 A Bid by a partnership shall be executed in the name of the firm by a member or other authorized person and accompanied by evidence of authority to sign. The state of formation of the firm and the official address of the firm shall be shown.

13.04 A Bid by a limited liability company shall be executed in the name of the firm by a member or other authorized person and accompanied by evidence of authority to sign. The state of formation of the firm and the official address of the firm shall be shown.

13.05 A Bid by an individual shall show the Bidder’s name and official address.

13.06 A Bid by a joint venture shall be executed by an authorized representative of each joint venturer in the manner indicated on the Bid Form. The official address of the joint venture shall be shown.

13.07 All names shall be printed in ink below the signatures.

13.08 The Bid shall contain an acknowledgment of receipt of all Addenda, the numbers of which shall be filled in on the Bid Form.

13.09 Postal and e-mail addresses and telephone number for communications regarding the Bid shall be shown.

13.10 The Bid shall contain evidence of Bidder’s authority and qualification to do business in the state where the Project is located, or Bidder shall covenant in writing to obtain such authority and qualification prior to award of the Contract and attach such covenant to the Bid. Bidder’s state contractor license number, if any, shall also be shown on the Bid Form.

ARTICLE 14 – SUBMITTAL OF BID

14.01 A Bid shall be received no later than the date and time prescribed and at the place indicated in the advertisement to bid and shall be enclosed in a plainly marked package with the Project title (and, if applicable, the designated portion of the Project for which the Bid is submitted), the name and address of Bidder, and shall be accompanied by the Bid security and other required documents. If a Bid is sent by mail or other delivery system, the sealed envelope containing the Bid shall be enclosed in a separate package plainly marked on the outside with the notation "BID ENCLOSED." A mailed Bid shall be addressed to:

TOWN OF SWEETSER TOWN COUNCIL
113 N MAIN STREET P.O. BOX 329
SWEETSER, IN 46987

14.02 Bids received after the date and time prescribed for the opening of bids, or not submitted at the correct location or in the designated manner, will not be accepted and will be returned to the Bidder unopened.

ARTICLE 15 – MODIFICATION AND WITHDRAWAL OF BID

15.01 A Bid may be withdrawn by an appropriate document duly executed in the same manner that a Bid must be executed and delivered to the place where Bids are to be submitted prior to the date and time for the opening of Bids. Upon receipt of such notice, the unopened Bid will be returned to the Bidder.

15.02 If a Bidder wishes to modify its Bid prior to Bid opening, Bidder must withdraw its initial Bid in the manner specified in Paragraph 16.01 and submit a new Bid prior to the date and time for the opening of Bids.

15.03 If within 24 hours after Bids are opened any Bidder files a duly signed written notice with Owner and promptly thereafter demonstrates to the reasonable satisfaction of Owner that there was a material and substantial mistake in the preparation of its Bid, that Bidder may withdraw its Bid, and the Bid security will be returned. Thereafter, if the Work is rebid, that Bidder will be disqualified from further bidding on the Work.

ARTICLE 16 – OPENING OF BIDS

16.01 Bids will be opened at the time and place indicated in the advertisement to bid and, unless obviously non-responsive, read aloud publicly. An abstract of the amounts of the base Bids and major alternates, if any, will be made available to Bidders after the opening of Bids.

ARTICLE 17 – BIDS TO REMAIN SUBJECT TO ACCEPTANCE

17.01 All Bids will remain subject to acceptance for the period of time stated in the Bid Form, but Owner may, in its sole discretion, release any Bid and return the Bid security prior to the end of this period.

ARTICLE 18 – EVALUATION OF BIDS AND AWARD OF CONTRACT

18.01 Owner reserves the right to reject any or all Bids, including without limitation, nonconforming, nonresponsive, unbalanced, or conditional Bids. Owner will reject the Bid of any Bidder that Owner finds, after reasonable inquiry and evaluation, to not be responsible. If Bidder purports to add terms or conditions to its Bid, takes exception to any provision of the Bidding Documents, or attempts to alter the contents of the Contract Documents for purposes of the Bid, then the Owner

will reject the Bid as nonresponsive; provided that Owner also reserves the right to waive all minor informalities not involving price, time, or changes in the Work.

18.02 If Owner awards the contract for the Work, such award shall be to the responsible Bidder submitting the lowest responsive Bid.

18.03 Evaluation of Bids

A. In evaluating Bids, Owner will consider whether or not the Bids comply with the prescribed requirements, and such alternates, unit prices, and other data, as may be requested in the Bid Form or prior to the Notice of Award.

B. ~~In the comparison of Bids, alternates will be applied in the same order of priority as listed in the Bid Form.~~ To determine the Bid prices for purposes of comparison, Owner shall announce to all bidders a "Base Bid plus alternates" budget after receiving all Bids, but prior to opening them. After determination of the Successful Bidder based on this comparative process and on the responsiveness, responsibility, and other factors set forth in these Instructions, the award may be made to said Successful Bidder on its base Bid and any combination of its additive alternate Bids for which Owner determines funds will be available at the time of award.

18.04 In evaluating whether a Bidder is responsible, Owner will consider the qualifications of the Bidder and may consider the qualifications and experience of Subcontractors and Suppliers proposed for those portions of the Work for which the identity of Subcontractors and Suppliers must be submitted as provided in the Bidding Documents.

18.05 Owner may conduct such investigations as Owner deems necessary to establish the responsibility, qualifications, and financial ability of Bidders and any proposed Subcontractors or Suppliers.

ARTICLE 19 – BONDS AND INSURANCE

19.01 Article 6 of the General Conditions, as may be modified by the Supplementary Conditions, sets forth Owner's requirements as to performance, payment, and maintenance bonds and insurance. When the Successful Bidder delivers the Agreement (executed by Successful Bidder) to Owner, it shall be accompanied by required bonds and insurance documentation.

ARTICLE 20 – SIGNING OF AGREEMENT

20.01 When Owner issues a Notice of Award to the Successful Bidder, it shall be accompanied by the unexecuted counterparts of the Agreement along with the other Contract Documents as identified in the Agreement. Within 15 days thereafter, Successful Bidder shall execute and deliver the required number of counterparts of the Agreement (and any bonds and insurance documentation required to be delivered by the Contract Documents) to Owner. Within ten days thereafter, Owner shall deliver one fully executed counterpart of the Agreement to Successful Bidder, together with printed and electronic copies of the Contract Documents as stated in Paragraph 2.02 of the General Conditions.

ARTICLE 21 – SALES AND USE TAXES

21.01 Owner is exempt from Indiana state sales and use taxes on materials and equipment to be incorporated in the Work. Said taxes shall not be included in the Bid. Refer to Paragraph SC-7.09 of the Supplementary Conditions for additional information.

ARTICLE 22 – SRF LOAN REQUIREMENTS

22.01 Financing for this project is expected to be through the Indiana Finance Authority State Revolving Fund Program. The SRF forms listed in Article 3.01 shall be submitted to the Owner by the prescribed date.

22.02 Davis-Bacon Wages

A. Bidder shall take note that wages paid throughout the project must meet or exceed those outlined in the Davis-Bacon Wage guidelines provided in Exhibit to the Bidding Documents.

22.03 U.S. EPA Green Project Reserve Program

A. Certain portions of components of this Project, which are described in the GPR Bid Breakdown Form (Exhibit E) furnished with the Bid Documents, qualify for the U.S. EPA Green Project Reserve (GPR) Program and/or Sustainability Incentive offered by the Indiana State Revolving Fund (SRF) Loan Program. Bidders shall complete the GPR Bid Breakdown form and submit the completed form with its Bid. This information is required by the U.S. EPA and the Indiana Finance Authority SRF Program and Bidder's failure to fully and accurately complete the GPR Bid Breakdown form and submit it with its Bid may result in the Bid being rejected as non-responsive.

ARTICLE 23 – OCRA REQUIREMENTS

23.01 Davis-Bacon Wages

1. Bidder shall take not that wages paid throughout the project must meet or exceed those outlined in the Davis-Bacon Wage guidelines provided in Exhibit to the Bidding Documents.

23.02 Build America Buy America Act

1. Bidder shall meet guidelines established by the appropriate federal regulations including Build America, Buy America Act (BABAA) requirements under Title IX of the Infrastructure Investment and Jobs Act ("IIJA"), Pub. LO. 177-58.
2. Bidder to review Exhibit K for all BABA documentation.
   a. Upon Notice of Award to selected bidder, BABA forms within Exhibit K must be submitted to Engineer and Grant Administrator.

ATTACHMENT NO. 15

UPDATED 40 05 16 DUCTILE IRON PIPE AND FITITNGS

SECTION 40 05 16 – DUCTILE IRON PIPE AND FITTINGS

PART 1 GENERAL

1.1 SUMMARY

A. Section Includes: Requirements for providing ductile-iron pipe, fittings and appurtenances, except soil pipe.

1. Provide ductile-iron pipe and fittings complete with all necessary jointing facilities and materials, specials, adapters and other appurtenances required for installation in and completion of the pipelines to be constructed.
2. Provide flanged mechanical joint pipe sizes and classes shown or specified.

B. Related Work Specified In Other Sections Includes, But is Not Limited to, the Following:

1. Section 09 96 00 - High Performance Coatings

1.2 REFERENCES

A. Codes and standards referred to in this Section are:

1. AWWA C104/A21.4 - Cement-Mortar Lining for Ductile-Iron and Gray-Iron Pipe and Fittings for Water AWWA C104/A21.4

2. AWWA C105/A21.5 - Polyethylene Encasement for Ductile-Iron Piping for Water and Other Liquids AWWA C105/A21.5

3. AWWA C110/A21.10 - Ductile-Iron and Gray-Iron Fittings 3 inches through 48 inches, for Water and Other Liquids AWWA C110/A21.10

4. AWWA C111/A21.11 - Rubber-Gasket Joints for Ductile-Iron and Gray-Iron Pressure Pipe and Fittings AWWA C111/A21.11

5. AWWA C115/A21.15 - Flanged Ductile-Iron and Gray-Iron Pipe with Threaded Flanges AWWA C115/A21.15

6. AWWA C151/A 21.51 - Ductile-Iron Pipe, Centrifugally Cast in Metal Molds or Sand-Lined Molds, for Water and Other Liquids AWWA C151/A21.51

7. AWWA C153/A21.53 - Ductile-Iron Compact Fittings, 3 inches through 12 inches, for Water and Other Liquids AWWA C153/A21.53

8. AWWA C606 - Grooved and Shouldered Type Joints AWWA C606

9. ASTM A 307 - Specification for Carbon Steel bolts and Studs

1.3 SYSTEM DESCRIPTION

A. Design Standards: Provide ductile-iron pipe meeting the requirements of AWWA C 151/A21.51.

1. Place pipe in structures using a minimum wall thickness of Thickness Class 52 for sizes up to and including 12-inch diameter and Thickness Class 51 for larger sizes, except provide Thickness Class 53 for pipe with threaded flanges or grooved-type joints.

2. Construct concrete encasement where shown.

1.4 SUBMITTALS

A. General: Provide all submittals, including the following, as specified in Division 1.

B. Submit the following shop drawings:

1. Pipe joints and fittings, sleeves, cleanouts and couplings. Where special designs or fittings are required, show the Work in large detail and completely describe and dimension all items.

2. Fully dimensioned layout of pipes, fittings, couplings, sleeves, cleanouts, expansion joints, harnessing, valves, supports, anchors and equipment. Label pipe size, materials, type, and class on drawings and include schedule.

3. Cross sections showing elevations of cleanouts, pipes, fittings, couplings, sleeves, valves, supports, anchors and equipment.

4. Catalog data for pipe, fittings, couplings, sleeves, harnessing and cleanouts.

C. Quality Controls: Submit certificates of compliance for pipe, fittings, gaskets, lining, polyethylene encasement, coatings, specials, couplings, sleeves and cleanouts in accordance with this Section.

1.5 DELIVERY, STORAGE AND HANDLING

A. Deliver, store and handle all pipe, fittings and couplings as specified in Division 1.

PART 2 PRODUCTS

2.1 MANUFACTURERS

A. Acceptable manufacturers are listed below. Manufacturers of equivalent product may be submitted.

1. Ductile-iron pipe and fittings.

a. American Cast Iron Pipe Company
b. McWane Incorporated
c. United States Pipe and Foundry

2. Ductile-iron retainer glands.

    a. 3-inch through 24-inch diameter
        (1) Nappco, Inc. Series 1246
        (2) Ebba Iron, Inc., Series 100

    b. larger than 24-inch diameter
        (1) Ebba Iron, Inc., Megalug

3. Sleeve-type couplings.

    a. 12-inches in diameter and smaller
        (1) Dresser Industries, Style 153
        (2) Smith-Blair, Type 441 Omni Coupling System

    b. larger than 12-inches in diameter
        (1) Dresser Industries, Style 38
        (2) Smith-Blair, Type 411

    c. Gaskets.
        (1) Dresser Plain Grade 27
        (2) Smith-Blair 003

4. Restrained push-on joints.

    a. U.S. Pipe, TR Flex
    b. McWane Incorporated, Super-Lock
    c. American Cast Iron Pipe Company, Lok-Ring or Flex-Ring

5. Gaskets.

    a. John Crane, Inc.
    b. Garlock Packing Company
    c. U.S. Rubber Company
    d. American Cast Iron Pipe Company
    e. United States Pipe and Foundry
    f. McWane Incorporated

6. Coatings and Linings

    a. Kop-coat
    b. Tnemec
    c. American Cast Iron Pipe Company
    d. United States Pipe and Foundry

2.2 MATERIALS

A. FITTINGS:

1. GENERAL: PROVIDE ALL FITTINGS MEETING THE REQUIREMENTS OF ANSI A21.10, UNLESS SHOWN OR SPECIFIED OTHERWISE. FITTINGS 14 INCHES AND LARGER REQUIRE A PRESSURE RATING OF 250 PSI, OR AS SPECIFIED, WHICHEVER IS GREATER.

2. FLANGED: WHERE LONG RADIUS FLANGED FITTINGS AND OTHER FLANGED FITTINGS NOT COVERED IN ANSI A21.10 ARE SHOWN OR INDICATED, PROVIDE ITEMS MEETING THE REQUIREMENTS OF ANSI A21.10 AND HAVING LAYING LENGTHS CONFORMING TO ANSI B16.1 FOR 350 PSI AMERICAN STANDARD FITTINGS.

3. NONFLANGE: WHERE COMPACT MECHANICAL JOINT OR RUBBER GASKET JOINT FITTINGS ARE SHOWN OR INDICATED, PROVIDE ITEMS MEETING THE REQUIREMENTS OF AWWA C153/A21.53.

B. Flanged Joints

1. Threaded Flanges: Provide threaded, ductile-iron, long hub flanges meeting the requirements of AWWA C115/A21.15.

   a. Screw flanges pipe on the threaded end of the pipe in the shop.

   b. Reface the face of the flange and the end of the pipe together.

   c. Design the flanges to prevent corrosion of the threads from the outside and to prevent leakage through the pipe threads.

2. Facing and Drilling: Provide flanges faced and drilled to the requirements of AWWA C115/A21.15, unless special drilling is called for or required. Face flange accurately at right angles to the pipe axis. Drill flanges smooth and true, and cover machined faces with zinc dust and tallow or equivalent material.

3. Taps: Tap flanges where tap or stud bolts are required.

4. Fasteners: Provide bolts, stud bolts, and nuts meeting the requirements of ASTM A 307, Grade B.

5. Gaskets: Provide full-face gaskets for flanged joints on 12-inch diameter and smaller pipe and gaskets of the ring type for flanged joints on larger pipe. Provide flange gaskets meeting the requirements of AWWA C115/A21.15 except make gaskets for gas lines with neoprene and aramid.

C. Rubber Gasket Joints

1. Provide mechanical joints and push-on type joints meeting the requirements of AWWA C111/A21.11.

D. Harnessing

1. General: For ductile-iron pipe and fittings with mechanical joints that require harnessing, provide ductile-iron mechanical joint retainer glands.

2. Joint Assemblies: Design the joint assemblies to resist pullout of the joints at the test pressures specified.

E. Wall Pipes and Sleeves

1. Wall Pipes

a. Where wall pipes are shown or specified, provide ductile iron wall pipes that meet the requirements of AWWA C110/A21.10 with end connections that are 1) of the types shown and 2) flush with the surfaces of the walls or floors. Unless otherwise shown or specified, provide wall pipes with intermediate collars located at the centers of the walls or floors.

2. Sleeves

a. Where pipes pass through exterior walls or floors or wetted interior walls or floors of structures and where wall pipes are not to be provided, provide ductile-iron sleeves meeting the requirements of AWWA C110/A21.10, with ends that are flush with the wall or floor surfaces and with intermediate collars located at the centers of the walls or floors.

b. Where pipes pass through non-wetted interior walls or floors and where wall pipes are not to be provided, provide ductile-iron sleeves meeting the requirements of AWWA C110/A21.10; steel pipe sleeves meeting the requirements of Section 40 05 17 or as shown or specified otherwise. Provide sleeves with ends that are flush with the wall or floor surfaces. Where shown or specified, provide intermediate collars located at the centers of the walls or floors.

c. Provide sleeves having large enough diameters to accommodate the passage of pipe joints, if required.

d. Where shown or specified, provide modular, mechanical sleeve seals, meeting the requirements in Section 40 05 18, in the annular spaces

between pipes and sleeves. In all other locations, see drawings for details.

F. Sleeve-Type Couplings

1. General: Manufacture middle rings to the following sizes.

   a. At least 1/4 inch thick and 5 inches wide for 8-inch diameter and smaller pipe.

   b. 3/8 inch thick and 7 inches wide for 10- through 30-inch diameter pipe.

   c. 1/2 inch thick and 10 inches wide for 36-inch diameter and larger pipe.

2. Design: Manufacture middle rings without a pipe stop. Provide follower rings of proper thickness. Provide molded rubber gaskets.
3. Refer to Specification 40 05 06 Couplings, Adapters, and Specials for Process Piping for additional information.

G. Cleanouts

1. General: Provide cleanouts where shown or specified.

2. Size: Provide not less than 6 inch diameter cleanout openings for pipe 8 inches in diameter or larger. Provide cleanout openings for pipe 6 inches in diameter or smaller of the same diameter as the pipe.

3. Cleanout Covers: Provide cleanout covers which are blind flanges meeting the requirements of AWWA C110/A21.10, except where conformation is required with the inside curvature of the pipeline, in which case the covers are flanged plugs of proper shape with American Standard flange drilling.

   a. Fasten covers by means of steel studs and bronze nuts. Drill and tap covers for a 1-1/2-inch diameter pipe connection.

4. Plugs: Equip the flange of conformed plugs with a dowel or other suitable means to provide proper setting.

H. Connecting Pieces, and Special Fittings

1. Connecting Pieces: Provide connecting pieces, such as bell and bell, bell and spigot, bell and flange, flange and flange, flange and spigot, and flange and flare, meeting the requirements of AWWA C110/A21.10.

2. Special Fittings : Provide special fittings, where required, of an approved design that have the same diameters and thicknesses as standard fittings,

unless otherwise required, but their laying lengths and other functional dimensions are determined by their positions in the pipeline and by the particular piping materials to which they connect.

I. Temporary Bulkheads: Provide temporary bulkheads at the ends of pipeline sections where adjoining pipelines have not been completed and are not ready to connect.

1. Removal: Remove all temporary bulkheads when they are no longer needed.

J. Coatings and Linings

1. Cement Lining: Provide all ductile-iron pipe and fittings having a cement-mortar lining not less than standard thickness meeting the requirements of ANSI A21.4, unless shown or specified otherwise.

2. Exterior Primer: Shop coat ductile-iron pipe and fittings on the outside with one coat of Kop-Coat 340 Gold Primer, 2.0 mils minimum dry thickness, for use in exposed locations, such as inside buildings, where finish painting or insulating is required.

3. Asphaltic Coating: Coat pipe ~~for use not exposed to view~~ with the standard asphaltic outside coating specified in AWWA C151/A21.51.

4. Encased Pipe: Do not coat or paint the outside of fittings and pipe which are to be encased in concrete where watertightness is to be obtained.

5. Labels: Paint the weight and class designation conspicuously in white on the outside of each pipe, fitting, and special casting after the shop coat has hardened.

6. Grooved-type Couplings: Shop coat couplings with Kop-Coat 340 Gold Primer, 2.0 mils minimum dry thickness.

7. Flange Joints: Immediately after facing and drilling, coat the back of the flanges and bolt holes with asphaltic coating meeting the requirements of AWWA C151/A21.51, Section 51-8.1.

8. Sleeve-type Couplings:

a. Shop coat couplings with Dresser Industries Red D or Smith-Blair Standard Blue shop coat.

b. Provide an additional shop coat of Kop-Coat Hi-Guard epoxy or Tnemec Pota-pox on the interior of the middle ring.

c. Finish coat exterior of sleeve-type coupling after installation with the same coating specified in Section 09 96 00 for the pipeline of which it is a part.

d. Ensure shop coats and finish coats are compatible.

e. Refer to Specification 40 05 06 for additional information.

K. Drip Pans: Provide drip pans constructed of 16-gauge Type 304 stainless steel.

PART 3 EXECUTION

3.1 INSTALLATION

A. General: Install all ductile-iron pipe and fittings in accordance with the manufacturer's recommendations and approved shop drawings and as specified in Division 1.

B. Insulation: Where shown or specified provide insulation, as specified in Section 40 42 00, for pipes and fittings that are exposed to atmosphere after installation.

C. Drip Pans: Provide drip pans under all ductile-iron pipelines installed over electrical equipment and motors and properly connect to the drainage system with 3/4-inch red brass pipe. Make leak tight connection between the drip pan and the drain pipe. Pitch pans uniformly toward the drain pipe not less than 1/8-inch per lineal foot.

3.2 LEAKAGE TESTING

A. Cleaning: Flush clean and test all pipes after installation.

B. Testing: Test pipes for leaks and repair or tighten as required.

C. Procedures: Conduct tests in accordance with Section 01 45 50.

END OF SECTION